QUICK REFERENCE – PRIMO TOUCH

SERVICE BREWER

6.5 Maintenance espresso group

6.5.1 Brewer replacement kit 25K

- *After 25,000 cycles, the filters and seals must be replaced. The display shows [Service brewer].*

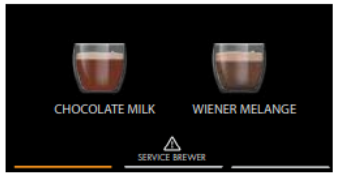

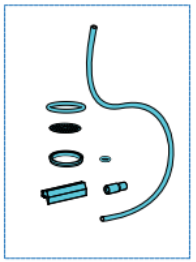

Brewer reversed replacement kit 25K	Brewer	
	Standard	XL
Part. No.	1057167	1057151
O-ring big	1x	1x
Wiper	1x	1x
Filter 150 µm	1x	1x
Teflon ring	1x	1x
O-ring small	1x	1x
Dispensing hose	1x	1x

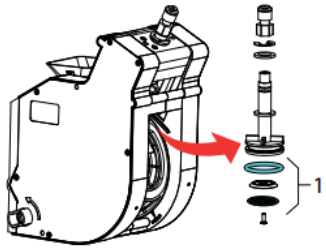

- *After 50,000 cycles, a complete inspection of the espresso group is recommended and any worn parts must be replaced.*

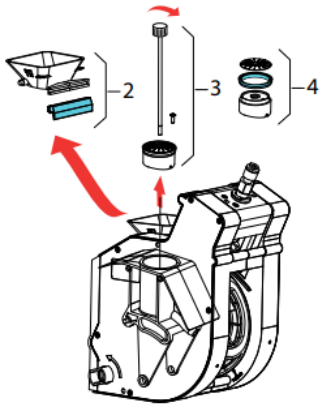

1. Replace the O-ring + filter [1] onto the upper piston (leave the piston in place).
2. Remove the funnel [2] by pulling it backward from the housing and place a new wiper.
3. Unscrew the brewer filter with a small crosshead screwdriver. Use the brewer fixation pin (as a corkscrew) to pull out the lower piston.
4. Wait until point 8 before you place a new Teflon ring [4].

1

BREWER CAPACITY

37mm 6.5g – 9.0g MAX

44mm 9.5g – 12.5g MAX

5. To place a new O-ring [8], first unscrew the bolt [5].
6. Pull out the piston rod [6].
7. Unscrew the two screws which hold the lower flange [7].
8. Place a new O-ring [8] and replace all parts in the reversed order.
9. Place a new brewer outlet hose [9].

Always place the outlet hose according to the drawing below.

10. After finishing the brewer maintenance, reset the service brewer signal in the service menu:

2.13 Other settings
└ **2.13.04 RESET SERVICE BREWER**

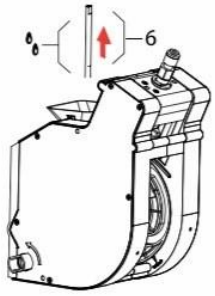

EN

New brewer installed?

After a new brewer is installed, reset the cycle counter in the service menu:

2.13 Other settings
└ **2.13.04 RESET CYCLE COUNTER**

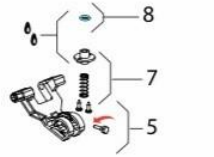

6.5.2 Drive unit

- *Remove any coffee dust that may be in the drive unit.*

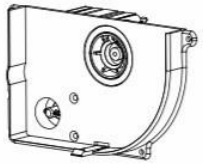

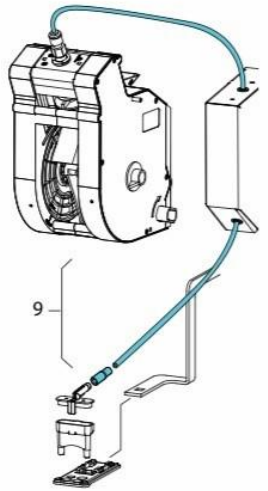

2

ERROR CODES

10.4 Troubleshooting

Display	Possible cause	Solution
E3 FILL ERROR	The boiler is filling up too slowly. During commissioning, the inlet valve KW1 must have filled the boiler within 180 seconds.	Check the water pressure, fully open the water supply tap, check the connecting hose for kinks. Switch the machine off and on again.
E5 BREWER ERROR	Brewer does not run to BREW position (closed) during the brewing process.	Check whether the brewer is properly positioned in the motor unit. Check the brewer switches for correct operation in the service menu **2.07 Hardware test**.
E6 HIGH TEMPERATURE	Temperature sensor measures a temp 105	Check the water supply for air.
		Check the temperature sensor operation in the service menu **2.07 Hardware test**.
		Check whether the boil-dry protection was activated. Reset if necessary.
E8 MIXER 2 ERROR	Mixer 2 motor stalled. Mixer 2 motor outputs overloaded (current too high). The control has disabled the output.	Check whether mixer 2 is contaminated or incorrectly mounted. Clean and/or check whether the rotor turns freely. Switch the machine off and on again.
E10 VALVE ERROR	Valve outputs overloaded (current too high). The control has disabled the output.	Check the valves and wiring for short circuits. Switch the machine off and on again.
E11 INGREDIENT MOTOR ERROR	Ingredient motors stalled. Ingredient motor outputs overloaded (current too high). The control has disabled the output.	Check the operation of the drive motors in the service menu **2.07 Hardware test**. Empty the canisters and clean thoroughly. Switch the machine off and on again.
E13 MIXER GROUP ERROR	Brewer and mixer output group overloaded (current too high). The control has disabled the output.	Carry out the checks as specified for E7 and E8. Switch the machine off and on again.
E14 OUTPUT ERROR	Ingredient motor output group overloaded (current too high). The control has disabled the output.	Carry out the checks as specified for E11. Switch the machine off and on again.
	Valve output group overloaded (current too high). The control has disabled the outputs.	Carry out the checks as specified for E10. Switch the machine off and on again.

EN

Display	Possible cause	Solution
E17 MDB ERROR	There is no communication between the machine and the MDB payment system.	Check the connection between the machine and the MDB payment system.
E18 MIXER GROUP FET ERROR	Brewer or mixer motor output remains activated.	Brewer or mixer motor output (FET) is defective. Replace the control.
E19 OUTPUT FET ERROR	Ingredient motor / valve / fan output remains activated.	Ingredient motor / valve / fan output (FET) defective. Replace control.
E21 BOILER TIMEOUT	Heating element is active for 6 minutes. If the boiler has not come to the set temperature after that, this error is the result.	Check the water supply for air.
		Check the boil-dry protection on the boiler.
		Check the log menu. If E6 boiler temperature error occurs, the boiler has boiled dry. Check the NTC sensor and wiring/connection and check the relays.
		Check the heating element.
E22 BREW TIMEOUT	Maximum preparation time exceeded (120 sec). The time for preparing a recipe has been exceeded.	Switch the machine off and on again. Run the rinsing program.
		Switch the machine off and on again. Run the cleaning program.
		Switch the machine off and on again. Check the pump pressure (10 bar).
		Switch the machine off and on again. Check that the coffee grind is not too fine.
		Replace the brewer filters.
E23 INLET VALVE ERROR	Flow meter registers water flow while the inlet valve is electrically closed.	Switch the machine off and on again. Check the operation of the inlet valve.
E24 BREWER ERROR	The brewer switches do not arrive in the correct position during the brewing process.	Check whether the brewer is properly positioned in the motor unit. Check the brewer switches for correct operation in the service menu **2.07 Hardware test**.

Display	Possible cause	Solution
E25 FLOW METER ERROR	The inlet valve is open but the flow meter does not register a water flow.	Check the water pressure, fully open the water supply tap and check the connecting hose for kinks. Check the operation of the inlet valve and the flow meter. Switch the machine off and on again.
	The water pressure is low or the water tank (stand alone set) is empty.	Check after which recipe the error occurs and check if the following dispensing valve functions are involved with the recipe: DV1 brewer, DV2 mixer, DV4 hot water recipe. Replace if necessary. Switch the machine off and on again.
E26 LOW TEMPERATURE	Temperature sensor measures a boiler temperature below 0 °C.	Boiler and/or NTC sensor is below 0 °C. Let the machine warm up to room temperature.
E27 NTC SHORT CIRCUIT	Temperature sensor measures a temperature higher than 125 °C or has a short circuit.	Boiler overheated. First, let the boiler cool down. Check if dry-boil protection was triggered. Check the NTC sensor and wiring/ connection.
E28 NTC NOT DETECTED	Temperature sensor is not detected.	Check the NTC sensor and wiring / connection.
E29 BREWER LEAVE HOME TIMEOUT	BThe bewer did not leave the starting position.	Check if the brewer motor runs. Check if the brewer unit is blocked.
E30 BREWER REACH BREW TIMEOUT	The brewer has left the starting position but did not reach the brewer position.	Check if the brewer motor runs. Check if the brewer unit is blocked.
E31 BREWER LEAVE BREW TIMEOUT	The brewer did not leave its brewing position.	Check if the brewer motor runs. Check is the brewer unit is blocked
E32 BREWER REACH HOME TIMEOUT	The brewer has left its brewing position but did not reach its starting position.	Check if the brewer motor runs. Check if the brewer unit is blocked.

EN

10.3 Display messages during use

Display	Possible cause	Solution
⚠ RINSING	Rinse program is not activated in time.	Run the rinse program and follow the instructions in the display. See chapter **6. Maintenance / 6.1 daily rinsing program.**
⚠ CLEANING	Cleaning program is not activated in time.	Run the cleaning program and follow the instructions in the display. See chapter **6. Maintenance / 6.2 Weekly rinsing program.**
⚠ SERVICE BOILER	Boiler needs maintenance.	See chapter **6.3 Periodic maintenance / 6.3.1 Service boiler.**
⚠ SERVICEBREWER	Brewer needs maintenance.	See chapter **6.3 Periodic maintenance / 6.3.2 Service brewer and 5.4.4 Servicing.**
⚠ WASTE BIN ALMOST FULL	Waste bin must be emptied shortly.	If you wait too long, the machine stops when the bin is full.
ⓘ BOILER FILLING	When used for the first time, the boiler is still empty and is being filled.	No action needed. Follow the instructions on the display. When the boiler is filled, 'Boiler heating' follows.
ⓘ BOILER HEATING	The boiler temperature is temporarily too low because too much water has been used.	Once the temperature is restored, the message automatically disappears and the drink selection buttons are reactivated.
ⓘ DRIP TRAY FULL	Drip tray full.	Once the drip tray is emptied, the message automatically disappears and the drink selection buttons are reactivated.
ⓘ WASTE BIN FULL	The maximum number of coffee cups that the waste bin can hold has been reached.	Empty the waste bin. The cup counter is automatically reset when the waste bin is replaced.

Display	Possible cause	Solution
WASTE BIN MISSING	The waste bin is not detected.	Check the waste bin.
DOOR OPEN	For safety reasons, the machine automatically switches off if the door is opened.	The machine can be operated with the door open by using the door pin.
STAND-BY	The machine is on standby.	This function can be set manually or automatically. Touch the screen and enter the pin code 1 1 1 1 1 to unlock it.
ENERGY MODUS	The machine is in energy mode.	Touch the screen to activate.
CLOSE DOOR	Door lock is not closed properly. Dispensing of hot water not possible.	Close the door lock.
RINSING	The rinse program is not activated in time. The machine locks up.	Run the rinse program and follow the instructions in the display. See chapter **6. Maintenance / 6.1 daily rinsing program.**
CLEANING	Tthe cleaning program is not activated in time. The machine locks up.	Run the cleaning program and follow the instructions in the display. **6. Maintenance / 6.2 Weekly rinsing program**
PLACE CUP	No cup is placed under the spout.	Place a cup under the spout.
PLACE CUP UNDER CORRECT OUTLET	The cup is not placed under the correct spout.	Place a cup under the correct spout.

EN

Display	Possible cause	Solution
YOUR DRINK HAS CANCELED	The cup was taken away too quickly.	Keep the cup in position during the drink preparation.
CUP SENSOR LEFT ERROR	The cup detection sensor as shown in the display is defective. The cup detection window is dirty.	The fault can be temporarily be neutralized by pressing the stop button. After 20 reset attempts, the error will be registered in the log menu. Clean the cup detection sensor windows. Replace the cup detection sensor.
CUPSENSORMIDDLE ERROR		
CUP SENSOR RIGHT ERROR		

CALIBRATION

2.6 How do you measure the weight of an ingredient?

Only the grinder or the ingredient motor will be driven (no water is dispensed).

It is strongly recommended to check the coffee measurement using a set of mini scales. These are easy to order via the internet.

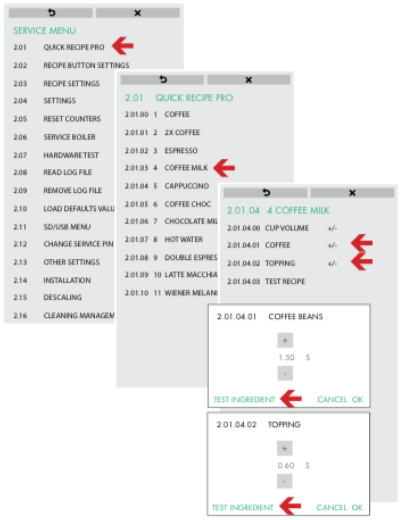

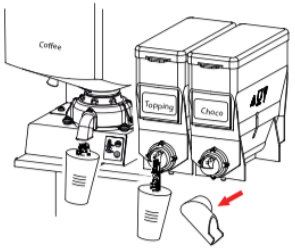

EN

1. Navigate to the service menu item shown above.
2. Hold an empty cup under the outlet.
3. Press TEST INGREDIENT. Only the chosen ingredient will be dispensed.
4. Measure the weight of the ingredient*

*Coffee
Standard espresso group: min. 6.5 g - max. 9.0 g.
XL espresso group: min. 9.5 g - max. 12.5 g.

2.7 Adjustment rules

2.7.1 Espresso group

The OptiBean can be configured to the following espresso groups:

Standard espresso group

- *A good cup of coffee (lungo) can be made with 7.5 - 8 g (0.26 - 0.28 ounce) of coffee.*
- *Suitable for a maximum of 9.0 g (0.32 ounce) of ground coffee (1 cup of coffee).*
- *Not suitable to brew a double cup of coffee in one brew cycle.*
- *There is a double-cup recipe (2x coffee) available in the software (double brew cycle).*

	(imp)
Standard	
min. 6,5 - max. 9,5* gram	(0,23 oz) (0,34 oz)
* max. 9,0 gram	(0,32 oz)
* max. 9,5 gram	(0,34 oz)

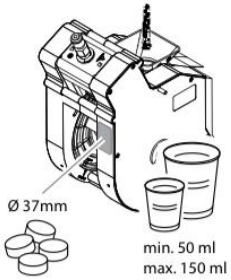

min. 50 ml (1,8 fl oz)
max. 150 ml (5,3 fl oz)

XL espresso group

- *Suitable for a maximum of 12.5 g (0.44 ounce) of ground coffee (1 cup of coffee).*
- *Suitable to brew a double cup of espresso (2x 70 ml) or double-cup coffee (2 x 115 ml) in one single cycle.*
- *Not suitable to brew a double cup of coffee > 115 ml in one cycle.*

XL	
min. 9,5 - max 13,4* gram	(0,34 oz) (0,47 oz)
* max. 12,5 gram	(0,44 oz)
* max. 13,4 gram	(0,47 oz)

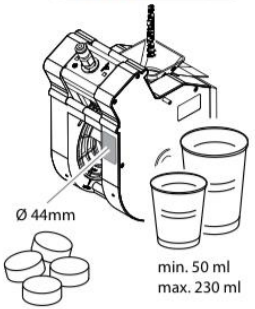

min. 50 ml (1,8 fl oz)
max. 230 ml (8,1 fl oz)

2.7.2 Coffee waste (puck)

- *It is very important how the compressed puck looks like when it is thrown out of the brewer.*
- *A puck that is too wet and falling apart is a sign that too little coffee is being dispensed and/or the coffee grinder is too coarsely tuned!*
- *Catch the puck while adjusting the compressed puck. Tip: Use the stainless steel brewer cover.*
- *A good puck is whole, dry and at least 15-17 mm thick.*
- *It is normal that a small amount of water leaves the brewer when it opens.*

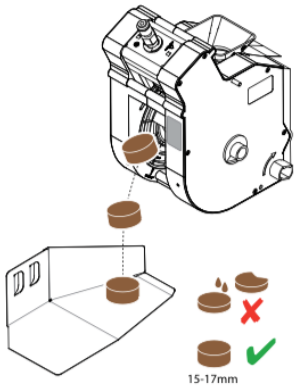

EN

2.7.3 Coffee grinder

There are two factors that affect the output of the coffee grinder: The grinder rotation time (**2.1 Quick recipe pro / Coffee beans)** and the **grinding fineness** of the coffee grinder. Try to find a balance among:

- *Cup volume (menu setting)*
- *Amount of ground coffee (menu setting)*
- *Ground coffee - coarse or fine (grinder adjustment)*
- *When the coffee grinder is set to a coarser setting, the volume of the grinder increases.*
- *When the coffee grinder is set to a finer setting, the volume of the grinder decreases.*
- *Adjust the grinder to a finer setting only when the grinder is operating! Adjustment from fine to coarse can be done when the grinder is stationary.*
- *Adjust the grinder setting in steps of 1/4 turns only. Note: Only the 3rd cup of coffee is made 100% with the changed grinding fineness! (do not measure the first 2 cups).*

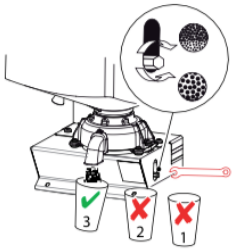

Run-in period of grinding discs

Tests have shown that new ceramic grinding discs have a start-up period of 10 kg of coffee beans (about 1350 cups at 7.5 g / XL = 1000 cups at 9.5 g).

We recommend to readjust (set to finer) the grinder after this period.

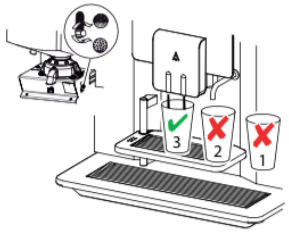

2.8 How to adjust a coffee?

After installation, the machine must always be adjusted for the coffee beans to be used. Use this chapter to help you do this. Once the coffee-making process has been set, the user must always use the same bean melange (mixture).

Coffee crème (lungo)

Always start with adjusting a **coffee** (usually button 1). First, make a couple of coffees without changing the settings and measure the brewing time of these cups of coffee.

The coffee brewing time is the time from the moment the pump starts until the moment the pump stops.

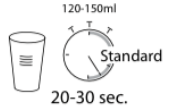

The brewing time of a coffee is dependent on two factors:

- *grinding fineness*
- *coffee dosage*

Adjust the grinder in such a way that a good cup of coffee is made according to the brewing times shown on the right. Make use of Chapters 2.2 to 2.4.

Espresso

Once the coffee creme has been set, there are some more settings for the Espresso.

Because the same coffee grind is used for an Espresso-based drink, the brew time for an Espresso (50 ml) will be much lesser than for a normal coffee.

If there is still volume left in the brew chamber from the espresso group (Standard: max. 9.0 g. / XL: max.12.5 g) it is possible to increase the grinding time.

By increasing the grinder time for the espresso drink in small steps, more coffee will be dispensed into the brewer chamber. This creates more resistance and a longer brewing time.

```
2.01 Quick recipe pro
  └─ 2.01.03 Espresso (drink)
        └─ Espresso
           Coffee beans (ingredient)
```

2.9 Adjustment tips

Cream layer too low	Cream layer perfect	Cream layer missing or too light
- The grind is too fine - Bitter taste - The preparation time is too long - Ground coffee dosing is high - Coffee drips from the splitter The coffee is ground too fine or the dispensed coffee is too much. The extraction is too extreme due to too long a contact time (too many bitter substances).	- The grind is correct - Perfect coffee taste - The preparation time is correct - The coffee measurement is correct - Coffee sprays full and parallel The coffee is ground well. The taste extraction is optimal. The cream layer is firm and persists for a long time.	- The grind is too coarse - Weak taste - The preparation time is too short - Ground coffee dosing is too low - Coffee sprays bend outwards The ground coffee is too coarse and cannot reach a good extraction. The coffee is underextracted. There is little or no cream layer.
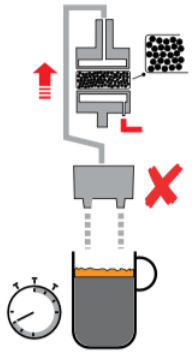	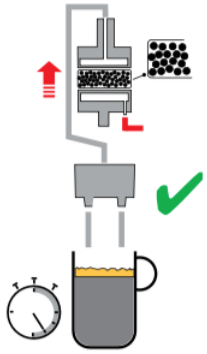	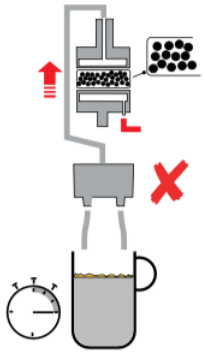
Advice: Set the coffee grinder to a coarser setting (adjustment is counterclockwise). Also, decrease the coffee dosing by 0.1 sec. **Note!** When setting the grinder to a coarser setting, there is a risk of excess measurement (coffee volume/weight increases) as a result of which the espresso group can jam.	Advice: Enjoy your coffee.	Advice: Set the coffee grinder to a finer setting (adjustment is clockwise). Adjust the grind setting in steps of a maximum of 1/4 turns each time. Do not measure the first 2 cups of coffee. Only the 3rd cup of coffee is made 100% with the changed grinding fineness!

7. TRANSPORT / SHUT DOWN

Required equipment and tools:

- *Crosshead screwdriver*
- *Tray of approx. 1.5 L*

WARNING

- Pressurised hot water! Do not remove components like valves, couplings, plugs and hoses before depressurising the boiler system.
- The drain hose becomes HOT!!
- After the boiler has been emptied the pump starts to pump out water from the tubing!

1. Activate the shut down menu in the service menu **2.14 Installation / Shut down** and follow the instructions on the display.
2. Close the water supply tap and remove the water supply hose.

3. Now there is no pressure in the boiler. The shut down menu can be cancelled if necessary. Follow the menu to empty the complete water system.
4. Remove the backplate, remove the drain hose from the backplate and remove the drainage plug. Let the boiler drain into an empty tray (approximately 1.5 litres).

5. The software now knows the water system is empty. If the unit is reinstalled, the commissioning menu will automatically be activated.

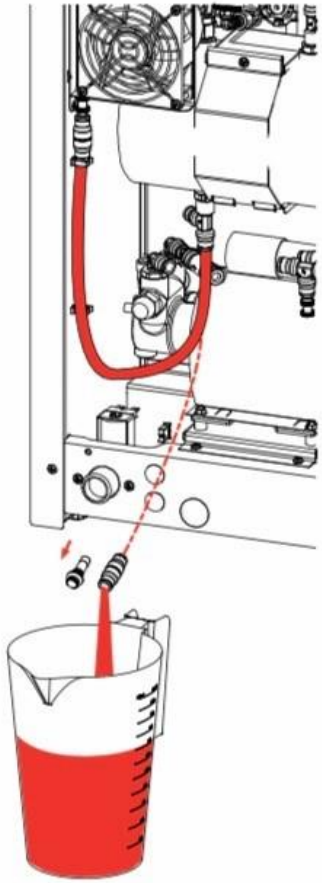

Display	Possible cause	Solution
E25 FLOW METER ERROR	The inlet valve is open but the flow meter does not register a water flow.	Check the water pressure, fully open the water supply tap and check the connecting hose for kinks. Check the operation of the inlet valve and the flow meter. Switch the machine off and on again.
	The water pressure is low or the water tank (stand alone set) is empty.	Check after which recipe the error occurs and check if the following dispensing valve functions are involved with the recipe: DV1 brewer, DV2 mixer, DV4 hot water recipe. Replace if necessary. Switch the machine off and on again.
E26 LOW TEMPERATURE	Temperature sensor measures a boiler temperature below 0 °C.	Boiler and/or NTC sensor is below 0 °C. Let the machine warm up to room temperature.
E27 NTC SHORT CIRCUIT	Temperature sensor measures a temperature higher than 125 °C or has a short circuit.	Boiler overheated. First, let the boiler cool down. Check if dry-boil protection was triggered. Check the NTC sensor and wiring/ connection.
E28 NTC NOT DETECTED	Temperature sensor is not detected.	Check the NTC sensor and wiring / connection.
E29 BREWER LEAVE HOME TIMEOUT	BThe bewer did not leave the starting position.	Check if the brewer motor runs. Check if the brewer unit is blocked.
E30 BREWER REACH BREW TIMEOUT	The brewer has left the starting position but did not reach the brewer position.	Check if the brewer motor runs. Check if the brewer unit is blocked.
E31 BREWER LEAVE BREW TIMEOUT	The brewer did not leave its brewing position.	Check if the brewer motor runs. Check is the brewer unit is blocked
E32 BREWER REACH HOME TIMEOUT	The brewer has left its brewing position but did not reach its starting position.	Check if the brewer motor runs. Check if the brewer unit is blocked.

EN

10.3 Display messages during use

Display	Possible cause	Solution
⚠ RINSING	Rinse program is not activated in time.	Run the rinse program and follow the instructions in the display. See chapter **6. Maintenance / 6.1 daily rinsing program.**
⚠ CLEANING	Cleaning program is not activated in time.	Run the cleaning program and follow the instructions in the display. See chapter **6. Maintenance / 6.2 Weekly rinsing program.**
⚠ SERVICE BOILER	Boiler needs maintenance.	See chapter **6.3 Periodic maintenance / 6.3.1 Service boiler.**
⚠ SERVICEBREWER	Brewer needs maintenance.	See chapter **6.3 Periodic maintenance / 6.3.2 Service brewer and 5.4.4 Servicing.**
⚠ WASTE BIN ALMOST FULL	Waste bin must be emptied shortly.	If you wait too long, the machine stops when the bin is full.
ⓘ BOILER FILLING	When used for the first time, the boiler is still empty and is being filled.	No action needed. Follow the instructions on the display. When the boiler is filled, 'Boiler heating' follows.
ⓘ BOILER HEATING	The boiler temperature is temporarily too low because too much water has been used.	Once the temperature is restored, the message automatically disappears and the drink selection buttons are reactivated.
ⓘ DRIP TRAY FULL	Drip tray full.	Once the drip tray is emptied, the message automatically disappears and the drink selection buttons are reactivated.
ⓘ WASTE BIN FULL	The maximum number of coffee cups that the waste bin can hold has been reached.	Empty the waste bin. The cup counter is automatically reset when the waste bin is replaced.

Display	Possible cause	Solution
WASTE BIN MISSING	The waste bin is not detected.	Check the waste bin.
DOOR OPEN	For safety reasons, the machine automatically switches off if the door is opened.	The machine can be operated with the door open by using the door pin.
STAND-BY	The machine is on standby.	This function can be set manually or automatically. Touch the screen and enter the pin code 1 1 1 1 1 to unlock it.
ENERGY MODUS	The machine is in energy mode.	Touch the screen to activate.
CLOSE DOOR	Door lock is not closed properly. Dispensing of hot water not possible.	Close the door lock.
RINSING	The rinse program is not activated in time. The machine locks up.	Run the rinse program and follow the instructions in the display. See chapter **6. Maintenance / 6.1 daily rinsing program.**
CLEANING	Tthe cleaning program is not activated in time. The machine locks up.	Run the cleaning program and follow the instructions in the display. **6. Maintenance / 6.2 Weekly rinsing program**
PLACE CUP	No cup is placed under the spout.	Place a cup under the spout.
PLACE CUP UNDER CORRECT OUTLET	The cup is not placed under the correct spout.	Place a cup under the correct spout.

EN

Display	Possible cause	Solution
YOUR DRINK HAS CANCELED	The cup was taken away too quickly.	Keep the cup in position during the drink preparation.
CUP SENSOR LEFT ERROR	The cup detection sensor as shown in the display is defective. The cup detection window is dirty.	The fault can be temporarily be neutralized by pressing the stop button. After 20 reset attempts, the error will be registered in the log menu. Clean the cup detection sensor windows. Replace the cup detection sensor.
CUPSENSORMIDDLE ERROR		
CUP SENSOR RIGHT ERROR		

SHUT DOWN

7. TRANSPORT / SHUT DOWN

Required equipment and tools:

- *Crosshead screwdriver*
- *Tray of approx. 1.5 L*

WARNING

- Pressurised hot water! Do not remove components like valves, couplings, plugs and hoses before depressurising the boiler system.
- The drain hose becomes HOT!!
- After the boiler has been emptied the pump starts to pump out water from the tubing!

1. Activate the shut down menu in the service menu **2.14 Installation / Shut down** and follow the instructions on the display.
2. Close the water supply tap and remove the water supply hose.

3. Now there is no pressure in the boiler. The shut down menu can be cancelled if necessary. Follow the menu to empty the complete water system.
4. Remove the backplate, remove the drain hose from the backplate and remove the drainage plug. Let the boiler drain into an empty tray (approximately 1.5 litres).
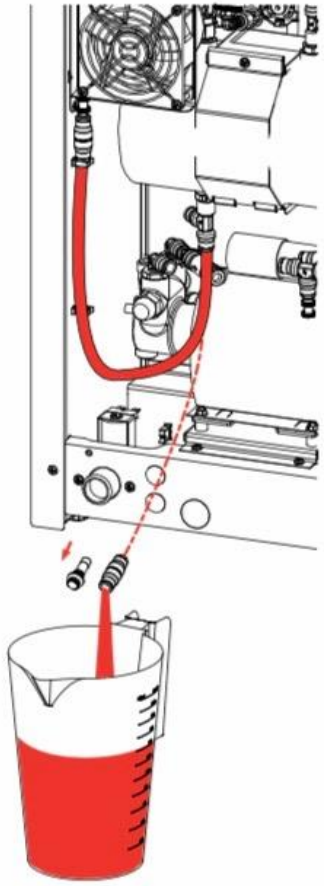
5. The software now knows the water system is empty. If the unit is reinstalled, the commissioning menu will automatically be activated.