westomatic
British Vending Excellence Since 1966

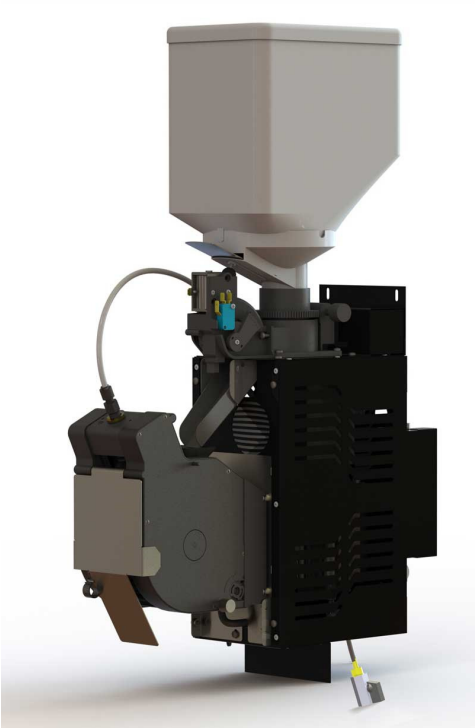

High Pressure Espresso Brewer

Operator & Installation Manual

High Pressure Espresso Brewer Operator Contents

Published by:
Westomatic Vending Services Ltd
Units 7-8 , Block 4 , Forde Court, Forde Road
Newton Abbot
Devon TQ12 4BT
United Kingdom
www.westomatic.com

Sales: +44 (0) 1626 323100 Email sales@westomatic.com

Information contained herein is correct at time of print: Revision 1.1 (September 2016)

1. Safety

- This document is intended for use as a reference book for qualified Operators and Service engineers. It is recommended that any person undertaking installation and/or service activity on this machine has previously attended a formal Westomatic training course specific to this vending machine type.

- This appliance is not intended for use by persons (including children) with reduced physical, sensory or mental capabilities, or lack of experience and knowledge, unless they have been given supervision or instruction concerning use of the appliance by a person responsible for their safety.

- Children under 8 yrs old must be supervised to ensure they do not play with the machine.

- Installation and service activity, including replacement of the mains cable, on this vending machine should only be undertaken by a competent person who is fully conversant with the potential dangers of working on live electrical equipment and mains pressure water systems.

- Extension cables or longer mains leads **must not be used to power this vending machine,** any mains leads should be kept away from hot surfaces and sharp edges.

- Every new vending machine is supplied with a new mains water inlet hose do not reuse existing hoses.

- Prior to any service activity, switch off and isolate the water and electrical supply. If in doubt refer to BS7671 for safe isolation procedures. Servicing of live equipment must **never** be undertaken.

- Use insulated tools and insulated probes on test equipment. HSE guidance notes 38 provides guidance on the selection of suitable test probes, leads, lamps, voltage indicating devices and other measurement equipment used by electricians when working on or investigating power circuits.

- There are no user serviceable parts inside the high pressure brewer.

- The Westomatic High Pressure Brewer must be cleaned on a regular basis to maintain drink quality (refer to the section within this document on how to clean your machine). A water jet **must never** be used.

1.1 Preface

This document is intended to be used as a reference book for qualified Installation Engineers and Operators to be able to install, commission, programme, maintain and to carry out basic fault finding diagnostics on the High Pressure Brewer.

Information on the operation, the use of and cleaning of the brewer can be found in the operational and cleaning sections of this manual.

1.2 Concepts and Definitions

Description	Definition
User	The person who uses the machine exclusively for vending a drink. The user will have **NO access to the inside of the machines.**
Service Technician and/or Installation Engineer	A competent professional who has been trained on the machine and is aware of the dangers involved. They must have a thorough knowledge of the electronics and mechanical parts of the machine and be qualified to install, commission, programme, maintain and repair the machines.
Operator	A qualified individual who is responsible for cleaning the machine, filling ingredients and cups, and has knowledge of removing brewers and the total whipper assembly for periodic cleaning.
Service Operator	A person who can carry out basic fault finding and the duties of an Operator, and therefore must be competent in both of these areas.
Westomatic	Westomatic Vending Services Ltd, the machine manufacturer.

Westomatic offers training programmes for the High Pressure Brewer. Contact your account manager for more information.

1.3 Liability & Warranty

All details and indications for the installation and cleaning of the High Pressure Brewer have been made under consideration of our knowledge and experiences collected up to now.

Westomatic Vending Services Ltd. reserves the right to make technical changes to the brewer without notice as a result of continuous product development.

Text translations are made to the best of Westomatic's knowledge. However, we exclude any liability for translation errors. The English version of the operation instructions shall prevail for warranty purposes.

The presented texts and drawings do not necessarily correspond to the scope of delivery. The drawings and graphics are not to scale.

The instructions contained herein must be carefully read before machine installation or operation is started.

Westomatic Vending Services Ltd does not bear liability for any damage or disturbance resulting from non-observance of the instructions in this manual.

It is strictly forbidden to make this manual or the operator instructions accessible to any third party. **Non-observance will result in a claim for damages.**

1.4 Spare parts

Only genuine, original Westomatic spare parts should be used when servicing the High Pressure Brewer.

ATTENTION!
Faulty or defective non-Westomatic spare parts may lead to incorrect machine operation or damage. Where non-Westomatic spare parts are used, all obligations of Westomatic Vending Services Ltd. such as warranties, service contracts etc. are void without prior notice and agreement.

Part Sales telephone: +44 (0) 1626 323100 or email psales@westomatic.com

1.5 Responsibility of the operating company

In order to avoid faulty machine operation and ensure safe Operator/Cleaning practices, this user manual and the associated operator guide should be stored inside the purpose built document holder located within the vending machine and be accessible to all persons involved in the machine installation, operation, maintenance and cleaning at any time.

It is the responsibility of the operating company to ensure that this vending machine must only be operated within a safe and reliable environment.

The information in this document relating to machine operational safety is based upon the essential health & safety requirements in force within the European Union at the time of publication. During the operating life of the machine it is the responsibility of the operating company to assess any differences in any new legislation and update the operational safety instructions along with their own safe working practices accordingly. Outside the European Union, the regulations valid at the place of installation and the regional regulations therein must be observed.

The High Pressure Brewer utilises 10Bar pressurised hot water at 110°C. Only authorised and certificated persons by Westomatic should carry out any maintenance on the brewer system, with full knowledge and understanding of the brewer, and its operation, full training is given to customers when purchasing a High Pressure Brewer.

1.6 Appropriate use

Westomatic Vending Services Ltd. will only undertake machine operational liability when the machine is used appropriately and in accordance with the operating instructions to perform assembly, operational, servicing / maintenance and cleaning activities.

NOTE:
Any machine usage outside of the above scope is forbidden and is defined as 'not appropriate'. In this situation, any entitlement to damages against Westomatic Vending Services Ltd. and / or representatives because of inappropriate use will be excluded. The operating company alone is liable for all damages arising from inappropriate use.

1.7 ATTENTION!

The operating company is obliged to install the necessary safety precautions to ensure the vending machine can be stopped immediately in the event of danger or disturbance.

1.8 Inspection upon delivery

Once your machine has been delivered, immediately check for completeness and possible damage caused by transportation.

In case of externally recognisable transport damages, do not accept delivery or only under reservation. Note the extent of any damage on the transport documents/delivery note of the forwarding agent. If necessary contact the Westomatic helpline as soon as possible to register any product damage as a customer complaint can only be asserted within the currently valid time limits.

Helpline Telephone: +44 (0) 1626 323100

2. Introduction

The information held within this section has been compiled by the manufacturer to provide recommended guidelines to operator personnel and is intended to be used in conjunction with any existing operating procedures your company uses.

2.1 Hygiene

In accordance with the food hygiene (Amendment) regulations 1990 (SI 1990 No. 1431) and in compliance with the local public health authority requirements, it is the responsibility of the machine Operator to keep this machine maintained in a clean condition to ensure the highest standards of hygiene needed to prevent the formation of bacteria. A regular, systematic method of cleaning will help achieve this condition.

A high standard of personal hygiene is essential for a vending machine operator.
Clothing must be neat and clean and loose hair should be tied back accordingly. Hands and fingernails must be washed thoroughly before work commences, particularly after each visit to the toilet area. Jewellery should be kept to a minimum and preferably removed during any cleaning operations.

An operative who is suffering from cuts, sores or any form of illness must inform their immediate superior at once and must not come into contact with this vending machine, ingredient products, cups or any other machine related items. The operative must not resume work until authorised to do so by their immediate superior.

2.2 Important safeguards

1. Read these instructions before attempting to clean or refill the machine.
2. Do not attempt to operate the machine if any part is damaged. If either damage or a fault is suspected contact your nearest available Service Engineer for assistance.
3. Never immerse the machine in water or any other liquid.
4. Never clean the machine with a water jet.
5. Always switch off and disconnect the machine from the mains electricity supply before cleaning and servicing.
6. Wash your hands thoroughly before entering the process area.
7. Remove your watch and any loose jewellery before opening the machine door.
8. Make sure that the machine is cleaned and maintained regularly.
9. Ensure you have had proper training of the coffee preparation and setup process before attempting any changes to the brewing process.

3. High Pressure Brewer external layout at a glance

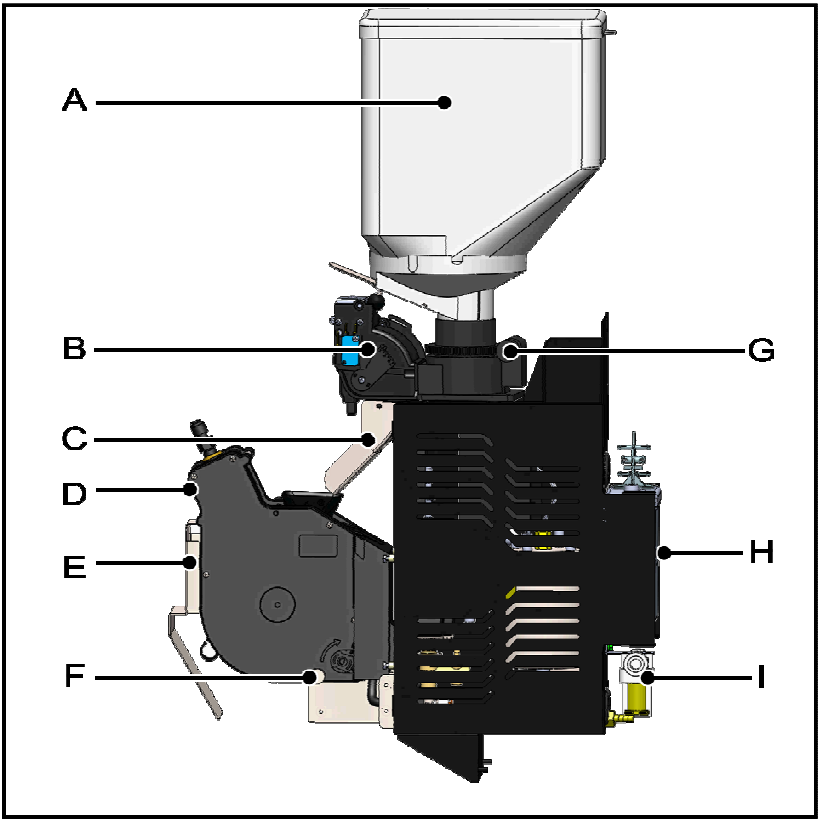

A	-	Coffee Bean canister 1.5Kg
B	-	Coffee Doser unit
C	-	Coffee Dispense chute
D	-	Espresso Brewer (9oz /180ml / Single Shot) or (12oz / 250ml / Double Shot)
E	-	Espresso waste puck bin guide
F	-	Espresso brewer retaining screw
G	-	Coffee bean grinder
H	-	Air break / water tank
I	-	Water inlet valve

3.1 Doser unit

The doser unit is used for dosing the ground coffee with an adjustment facility (B) for exact dose measures. Coffee dosage adjustment is achieved mechanically by means of a micro switch (A) activating a solenoid. The doser unit is mechanically fixed close to the grinder to minimise the amount of unused coffee grinds, ensuring every coffee is freshly ground on demand. A manual override button (C) is used to manually operate the doser by pressing upwards.

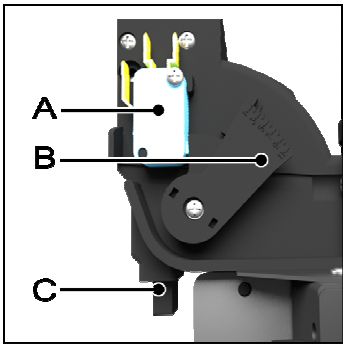

A	:	Doser full switch
B	:	Doser capacity setting
C	:	Manual release button

3.2 Doser Capacity

The Doser capacity can be set by the doser lever position (A). Each of the 11 positions refers to an approximate dose of 0.5gr ± 0.1gr

Doser capacity from 5.5gr to 10.5gr with a medium degree ref. CEI EN 60661

The doser lever position (A) can be moved to the desired indexed position to attain the correct gram throw by pushing in towards the doser body and moving the lever arm (A) into the next indexed position shown on (B) following the dose lever position typical gram throw chart.

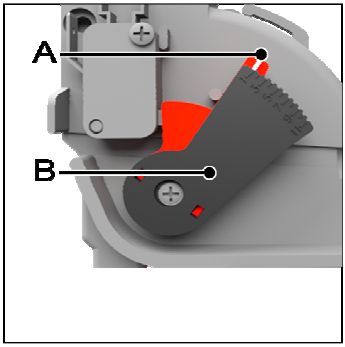

Doser Lever Position	1	2	3	4	5	6	7	8	9	10	11
Gram Throw	5.5	6.0	6.5	7.0	7.5	8.0	8.5	9.0	9.5	10.0	10.5

3.3 Manual Doser Release

Pressing button (A) upwards on the bottom of the doser can be used to manually empty the doser.

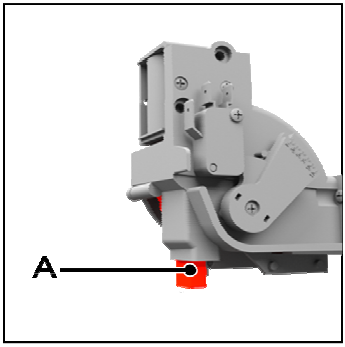

3.4 Grinder

The espresso brewer incorporates a 230Vac 48mm Conical grinder (C) suitable for grinding coffee beans with the possibility of regulating the desired grain whether it is course or fine according to taste requirements. The ground coffee dose is dispensed by means of a volumetric doser mounted directly onto the outlet of the grinder (A). Rotating the grinder adjustment wheel (B) clockwise will make the grind finer similarly rotating the grinder adjustment wheel anti clockwise will make the grind coarser.

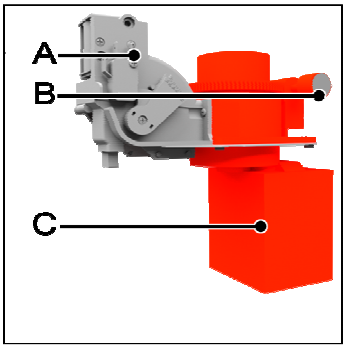

3.5 Air break

The air break is the cold water storage for the espresso brewer boiler housing the liquid level probes avoiding the use of probes or floats inside the boiler. The air break eliminates fluctuations in water pressure, providing a constant gravity fed supply of water to the boiler.

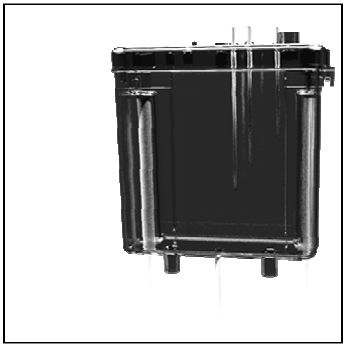

4. High Pressure Brewer internal layout at a glance

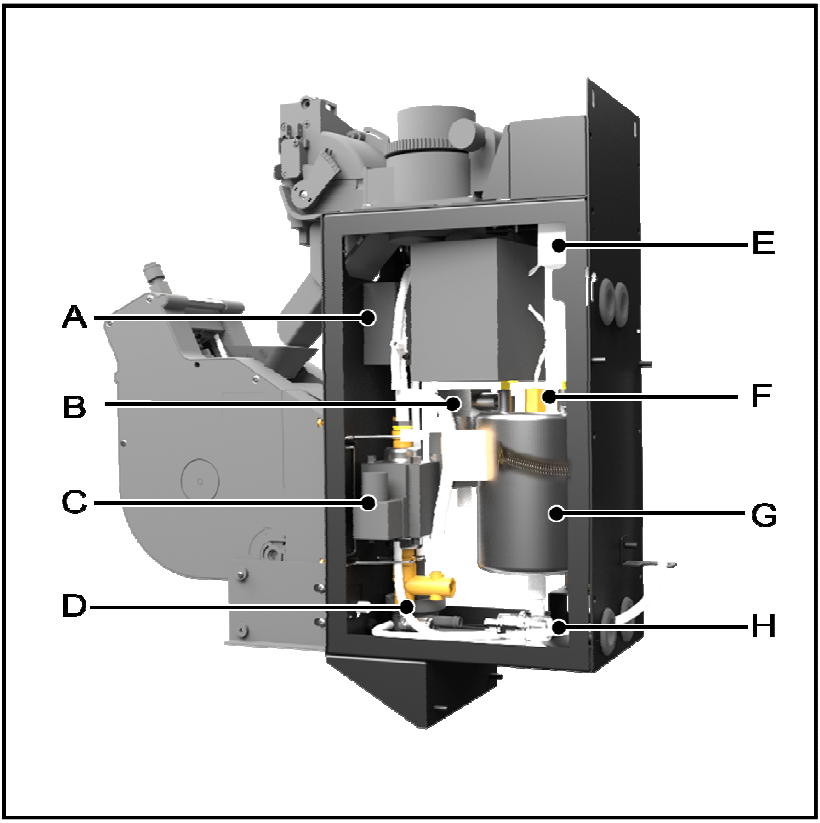

A	-	Expresso brewer air circulation fan
B	-	Boiler outlet solenoid with pressure relief valve
C	-	Water pump 10Bar
D	-	Volumetric counter
E	-	Espresso brewer control board
F	-	NTC thermostatic probe
G	-	Espresso boiler with element and thermal cut out at 125°C
H	-	Espresso brewer filter

There are no user serviceable parts in the espresso brewer. Service of the brewer should only be carried out by trained personnel.

5. Cleaning the High Pressure Brewer

Tools required:

- Bucket of Warm water
- Hand gloves
- Brewer cleaning tablet (9199607)
- Suitable vending machine sanitizer for use in contact with food
- Cleaning cloths (9199608)
- Waste bin bags

The quality of drinks produced by the High Pressure Brewer can only be maintained if the machine is cleaned regularly following the required cleaning schedule.

5.1 Cleaning Routine

5.1.1 Daily Cleaning

Machine Part	See Section	Replacement Part
Coffee Dispense Chute	5.1.6	1037321
Coffee Doser	5.1.6	1058006
Brewer Unit	5.1.4	1058008 (180ml) / 1058001 (250ml)
Coffee Dispense Pipes	5.1.4	
Coffee Waste Bin	5.1.8	
Liquid Waste Bin	5.1.9	
Brewer Waste Guide	5.1.7	1037324
Door drip tray	5.1.10	

5.1.2 Weekly Cleaning

Machine Part	See Section	Replacement Part
Coffee Dispense Chute	5.1.6	1037321
Brewer Unit Deep Clean	5.1.5	
Coffee Dispense Pipes	5.1.12	
Coffee Waste Bin	5.1.8	
Liquid Waste Bin	5.1.9	
Brewer Waste Guide	5.1.7	1037324

5.1.3 Monthly Cleaning

Machine Part	See Section	Replacement Part
Brewer Unit Assembly	5.1.11	
Coffee Grinder	5.1.11	1055001
Bean Canister	5.1.11	1012010

5.1.4 Using the rinsing program Daily Cleaning

1: Open the machine door.
2: Place the liquid waste bin under the dispense head.
3: Press the FLUSH HOT button (A) on the rear of the machine door
4: Follow the instructions on the touch screen or LCD Display.

Take care as hot water will be flowing through each mixing bowl and brewer in turn.

Coffee dispense pipes will be cleaned during the hot water flush. Perform this function daily to flush old stale coffee out of the system.

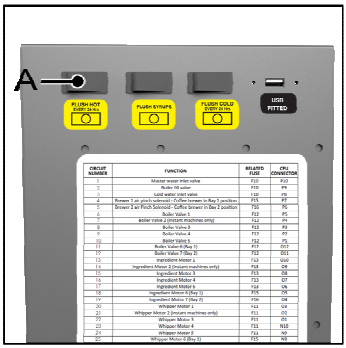

5.1.5 Using the Cleaning Program Weekly Cleaning

1: Open the machine door.
2: In door open mode press the OPERATOR ACTIONS Button the right side of the screen.
3: In Operator actions press the Clean Brewer button (A) and follow the onscreen prompts.

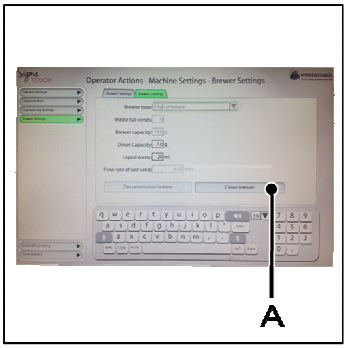

When prompted by the machine place a cleaning tablet (9199607) into the brewer as shown.

The cleaning cycle will deep clean the brewer and pipework removing all tanning and stale coffee whilst sanitizing all contact parts.

The deep cleaning of the brewer can take a couple of minutes to complete, do not interrupt the power during the deep clean flush, if power is removed from the machine the deep clean flush will resume when power has been restored.

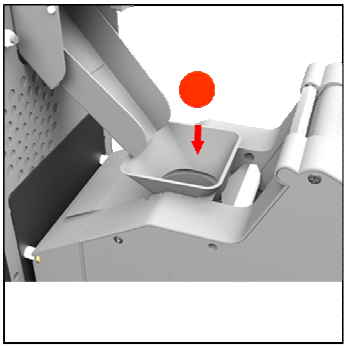

5.1.6 Cleaning the Doser and Dispense chute

1: Open the machine Door
2: Switch off the power to the machine.
3: Operate the Doser (A) as per instructions 3.3 Page 8.
4: Clean dispense chute (B) with a soft cloth or brush.

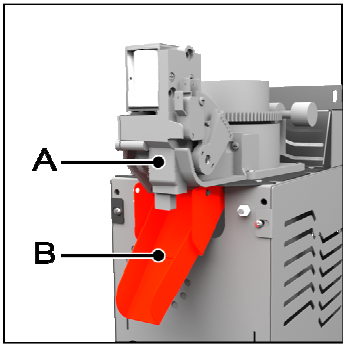

5.1.7 Brewer Waste Guide

1: Open the machine door.
2: Switch off the machine.
3: Remove the Brewer waste guide (A).
4: Clean the waste guide in warm water.

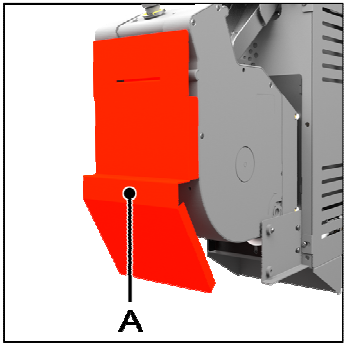

5: With the waste guide removed the coffee waste slide in the brewer (A) can be cleaned with warm water.
6: Refit the Brewer Waste Guide when complete.

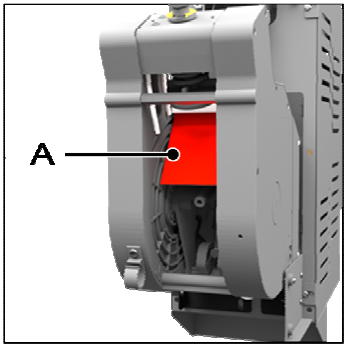

5.1.8 Solid Waste Bin

1: Switch off the power to the machine.
2: Clean the brewer waste guide as per 5.1.7
3: Remove and clean the waste chute (A).
4: Remove the solids waste bin (B).
5: Empty / Clean waste bin (B).
6: Replace the bin bag and replace parts (A) & (B).

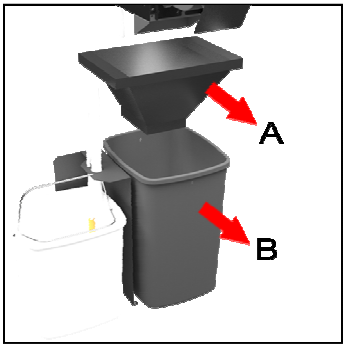

5.1.9 Liquid Waste Bin

1: Switch off the power to the machine.
2: Remove and empty the liquid waste bin (A).
3: Clean and sanitize the liquid waste bin (A).

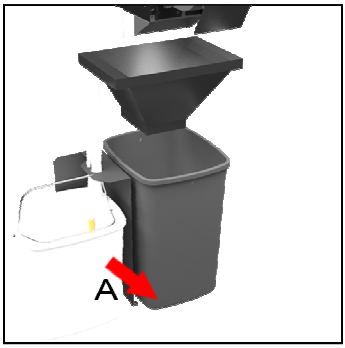

4: Before replacing the liquid waste bin make sure that the brass pressure weight along with the other white silicon pipes (A) are situated inside the liquid waste bin.
5: Replace the liquid waste bin.

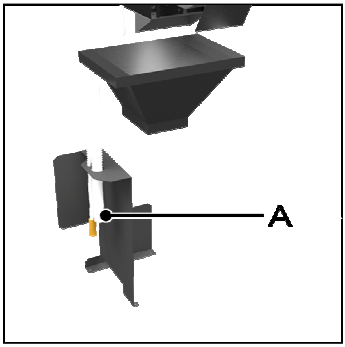

5.1.10 Door drip tray

1: Remove the door drip tray (A).
2: Clean the drip tray in warm water.
3: Replace the drip tray after cleaning.

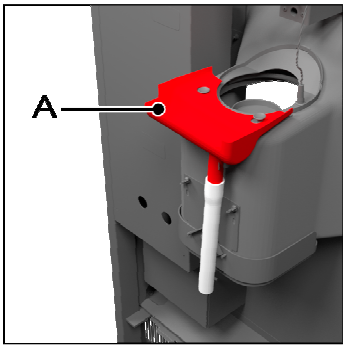

5.1.11 Cleaning the bean canister

1: Switch off power to the machine.
2: Close the bean supply trap (A).
3: Remove the bean canister from the machine.
4: Discard any beans older than 7 days.
5: Clean and dry the bean canister and its parts thoroughly.

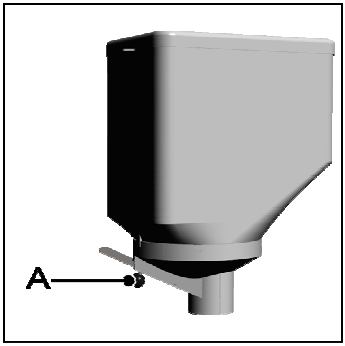

6: On the rear of the door for Bean to Cup machines there is a lift and lock bean canister holder. Lift and pull down to lock into place.
7: Place the bean canister into the holder for safe filling of ingredient.

8: Clean the flat surfaces of the brewer module (A) with a suitable dry cloth or brush.
9: Replace the canister back into the machine remembering to open the bean supply trap and replace the canister holder in its upright position before closing the door.

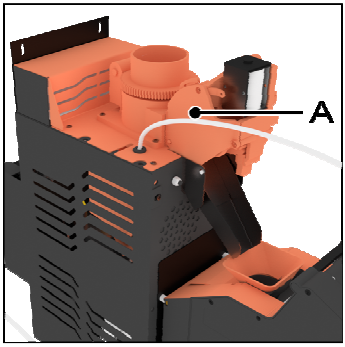

5.1.12 Coffee Dispense Pipes

1: Switch off power to the machine.
2: Remove the brewer waste guide (see 5.1.7)
3: Remove pipe (A) from the dispense head.
4: Remove the pipe from pipe clip (B).
5: Pull the Anti drip nozzle (C) towards you to remove.

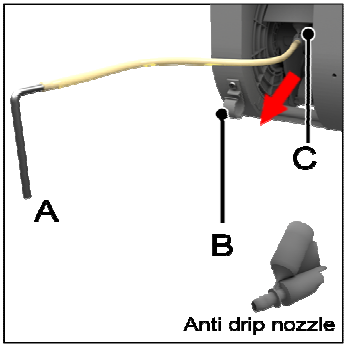

6: The espresso outlet pipe can now be cleaned and sanitized.

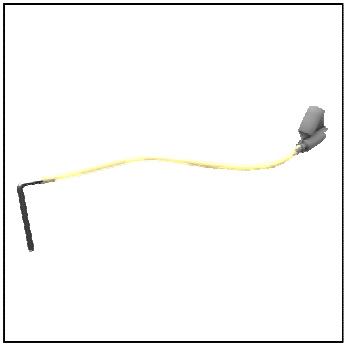

7: Replace the anti-drip nozzle back into the brewer in the reverse order to removal.
8: Note the position of the coffee dispense nozzle in the moving dispense head as shown.

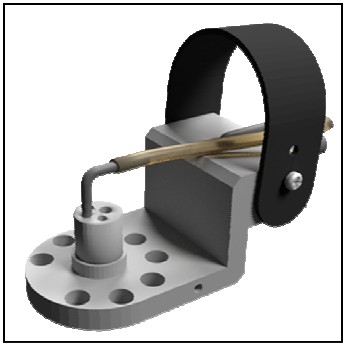

5.1.13 Final checks

After cleaning all the parts on the machine it is important that all the components are replaced in the correct position for continued safe operation.

Did you?

1. Replace the waste bins and fit new bin bag?
2. Fit the brewer waste guide?
3. Fit the brewer bin waste chute?
4. Fit the doser ingredient chute?
5. Fill and replace the bean canister?
6. Open the bean canister gate to allow beans to fall through?
7. Lift and stow the bean canister filling platform on the rear of the door?
8. Fit the coffee outlet pipe from the brewer to the dispense head?
9. Positon the coffee outlet pipe in the correct position in the dispense head?
10. Refit the door drip tray?
11. Switch on the machine?
12. Close the machine door?
13. Take a test vend?
14. Check for water leaks?
15. Clean up and take your waste with you?
16. Did you report anything out of the ordinary with the machine to your operations manager?

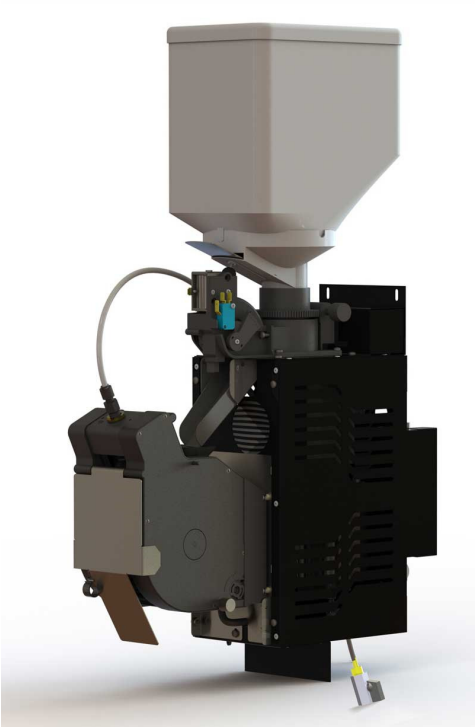

High Pressure Espresso Brewer

Installation Manual

6. Electrical & Water Information

Boiler Supply voltage	230Vac 50Hz
AC Current	7Amps
DC Current	4Amps
Power	1.6 Kilowatts MAX
Frequency	50Hz
Internal dc control voltage	24Vdc
Bean to cup grinder	230Vac 50Hz

6.1 Machine fuse ratings:

The Sigma range of machines have a yellow fuse rating panel. Any machines fitted with the High Pressure Espresso Brewer have an orange fuse rating sticker as shown above. All fuses other than F5 and F16 relate to the Sigma vending machine and are beyond the scope of this manual.

F5	- 230Vac Espresso Brewer	(Time Lag)	T10.0 Amps	(32x6.3mm HBC – WVS No.1025010)
F16	- 24Vdc Espresso Brewer	(Time Lag)	T5.0 Amps	(32x6.3mm HBC – WVS No.1025007)

Do not fit a different type of fuse rating other than the fuses specified above!

6.2 Water services

Mains water supply from a 15 mm (1/2") rising main.
Minimum water pressure 0.2Mpa (29 psi / 2 Bar)
Maximum water pressure 0.6Mpa (87 psi / 6 Bar)
On board water tank supply 300cc

Reference should be made to the model water bylaws 1986 statutory instrument (SI) No.1147.

6.3 Operating conditions

The Sigma machines are suitable for indoor use only between +10°C and +30°C.

7. Principle of Operation

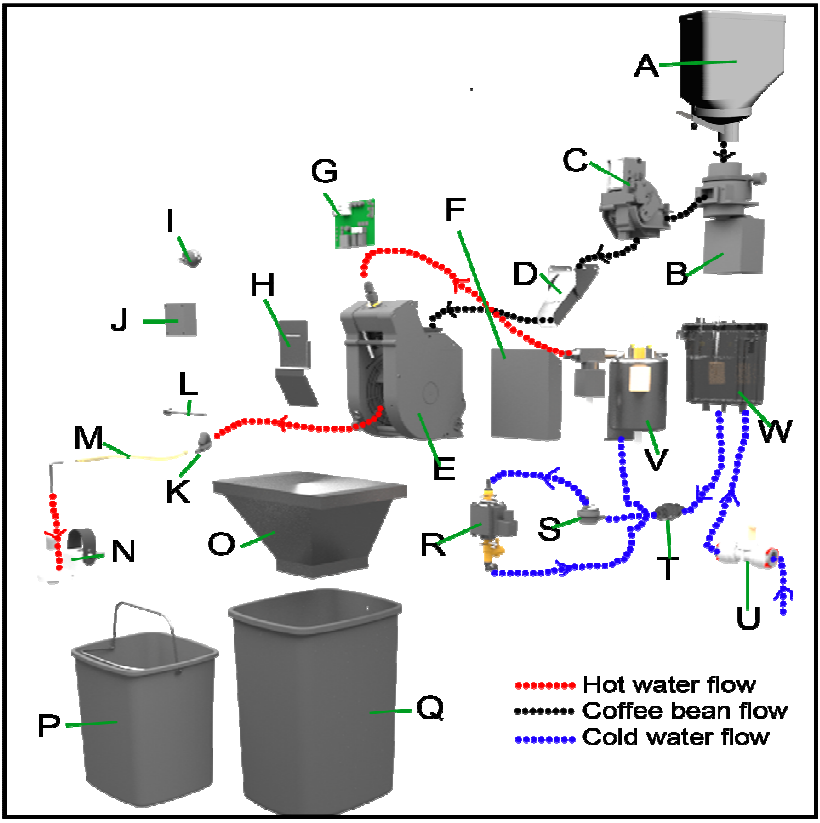

Item	Description	Replacement Part	Item	Description	Replacement Part
A	Bean canister	10120010	M	Espresso outlet pipe	1029038+1029072
B	Coffee grinder	1055001	N	Dispense arm block	
C	Coffee doser unit	1058006	O	Waste chute	
D	Coffee dispense chute	1037321	P	Liquid waste bin	
E	Espresso brewer	1058008(9oz 180ml) 1058001(12oz 250ml)	Q	Solid waste bin	
F	Espresso brewer motor	*Supplied with E*	R	Water pump 10Bar	1046006
G	Control board	1042030	S	Volumetric flow meter	1058004
H	Waste puck bin guide	1037324	T	Water filter	1058005
I	Heater control triac	1018042	U	Water inlet valve	1050004
J	Extraction fan	1020004	V	Boiler 500ml	1058002
K	Anti drip nozzle	1058007	W	Air break / water tank	1058003
L	Brewer retaining screw	*Supplied with E*			

7.1 High Pressure Brewer external layout at a glance

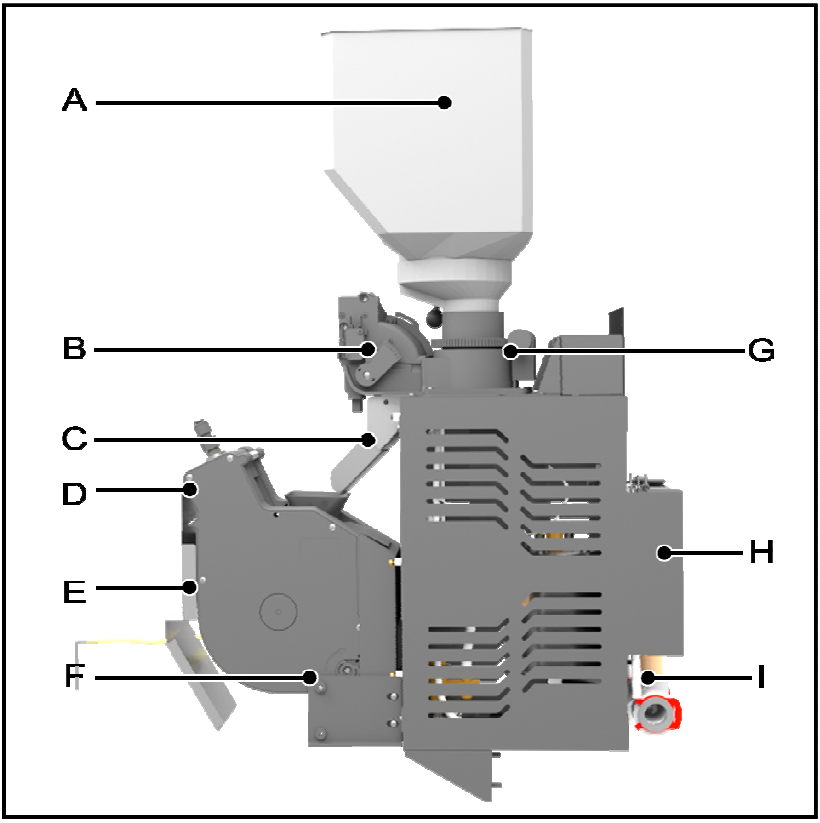

A	-	Coffee Bean canister 1.5Kg
B	-	Coffee Doser unit
C	-	Coffee Dispense chute
D	-	Espresso Brewer (9oz /180ml / Single Shot) or (12oz / 250ml / Double Shot)
E	-	Espresso waste puck bin guide
F	-	Espresso brewer retaining screw
G	-	Coffee bean grinder
H	-	Air break / water tank
I	-	Water inlet valve

7.2 High Pressure Brewer internal layout at a glance

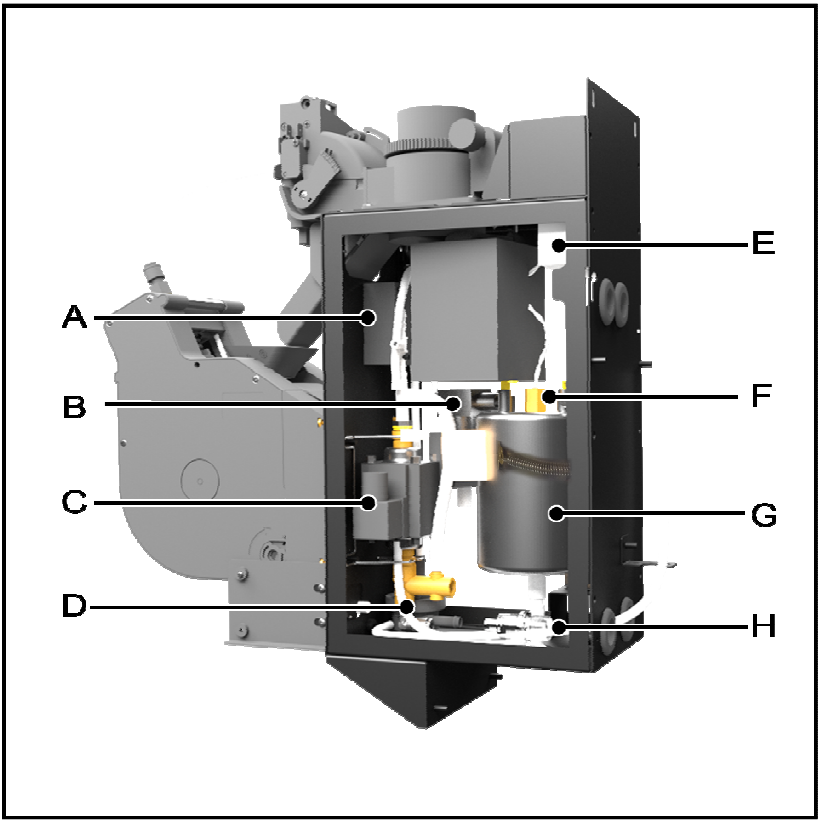

A	-	Expresso brewer air circulation fan
B	-	Boiler outlet solenoid with pressure relief valve
C	-	Water pump 10Bar
D	-	Volumetric counter
E	-	Espresso brewer control board
F	-	NTC thermostatic probe
G	-	Espresso boiler with element and thermal cut out at 125°C
H	-	Espresso brewer filter

There are no user serviceable parts in the espresso brewer. Service of the brewer should only be carried out by trained personnel.

7.3 Water management

Water flow through the High Pressure Brewer from the main water inlet valve [A] to the hot water outlet to the brewer [G]

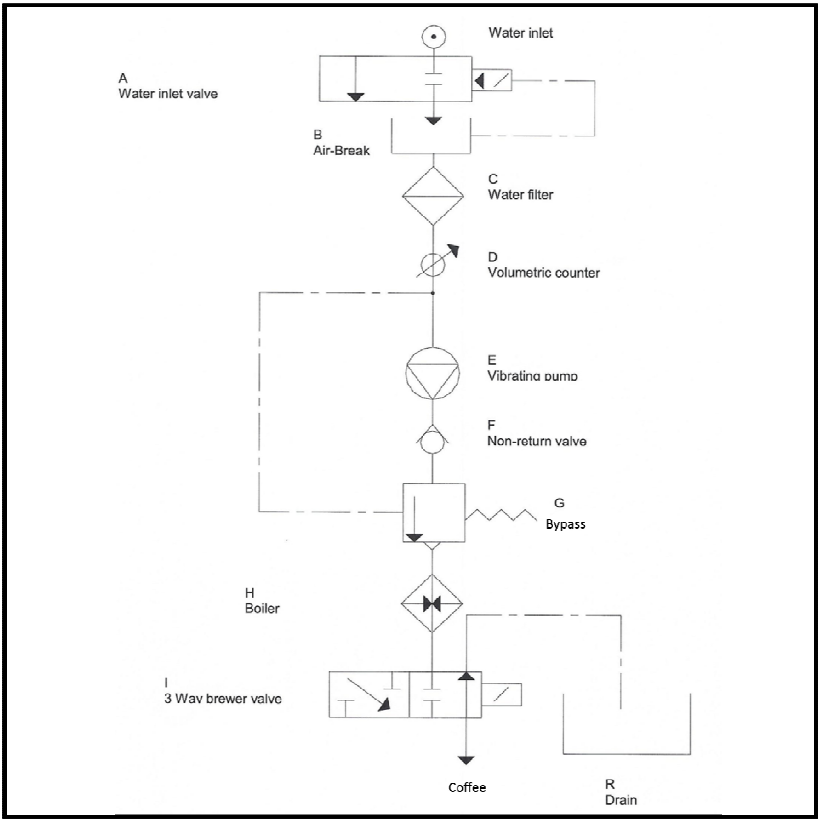

7.4 Components

1	**Inlet Valve [1058002]** Opens and closes the water supply to the air break 24V dc coil Takes water supply from the Sigma machine after the main water inlet valve.	
2	**Air Break [1058003]** Filled by the inlet valve [1]. Stores cold water safety avoiding the use of level probes inside the boiler reducing scale build up. The air break also eliminates water pressure fluctuations.	
3	**Water filter [1058005]** After the air break water passes through a 200Micron inline water filter. This must be changed on an annual basis to maintain drink quality and protect the water pump and volumetric counter.	
4	**Volumetric counter [1058004]** This measures the flow of water through the system by use of rotating magnets and hall sensors. This accurately measures the amount of water flowing through the brewer for the perfect espresso shot.	
5	**Water Pump [1046006]** The rotary pump increases the water pressure to 10Bar. Non return valve fitted with a by-pass valve. Never run the pump without water or with a blocked outlet pipe. The pressure of the pump is set at 10Bar and cannot be altered. Operated from a 230Vac 50Hz supply. [Fuse F5]	
6	**Boiler [1058002]** Water capacity 500ml Heater Element 1500w 230Vac 50Hz NTC 100K temperature probe 125°C Manual reset over temperature cut out switch 24V dc hot water output solenoid to brewer with over pressure bypass set at 14 Bar	
7	**High Pressure Brewer** **Single Shot 7g 9oz drink capacity [1058008]** **Double Shot 14g 12oz drink capacity [1058001]** The brewer is filled with ground coffee from the doser which is compacted, and subjected to hot water at 10Bar which is pumped through the coffee into the cup. At the end of the cycle the coffee puck is ejected from the brewer into the waste bin.	

8	**Anti-drip nozzle [1058007]** The anti-drip nozzle connected to the output of the brewer allows air to enter the coffee delivery pipe avoiding a vacuum to build up causing drips when the brewer moved to its home position.	
9	**Waste puck bin guide [1037324]** This fits onto the waste outlet of the brewer to guide the spent coffee grounds into the waste bin. Never run the brewer without this fitted.	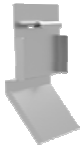
10	**Coffee grinder [1055001]** 230Vac, 48mm diameter Conical mill grinder with coarse to fine adjustment to suit all coffee variant's. Grinder blades should be changed every 30,000 vends or annually whichever is sooner to reduce loading on the grinder motor and maintain consistent quality grinding of the beans.	
11	**Coffee Doser unit [1058006]** The coffee doser unit is powered via a 24V dc supply. Coffee dosage is achieved by mechanical means of a micro switch activating a solenoid. The doser unit has a referenced guide to typical gram throws delivering a dose of between 5.5 and 10.5 grams.	
12	**Control PCB [1042030]** The control board stores all the information regarding the control of the Espresso brewer and is independent of the main VMC, this ensures that all the control over the Espresso brewer is not interrupted during the vend. Led lights on the board indicate the status of the brewer at all times.	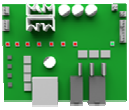
13	**Heater control Triac [1018042]** Mounted on the rear of the brewer is the heater control triac, this switches the boiler on/off to maintain the correct water temperature for optimum extraction.	
14	**Extraction fan [1020004]** The 24V dc fan has a dual purpose. First is the circulation of warm air in the brewer module to reduce heat build-up. The second function is to circulate the aroma of coffee throughout the machine and its surroundings.	

7.5 High Pressure Espresso Brewer

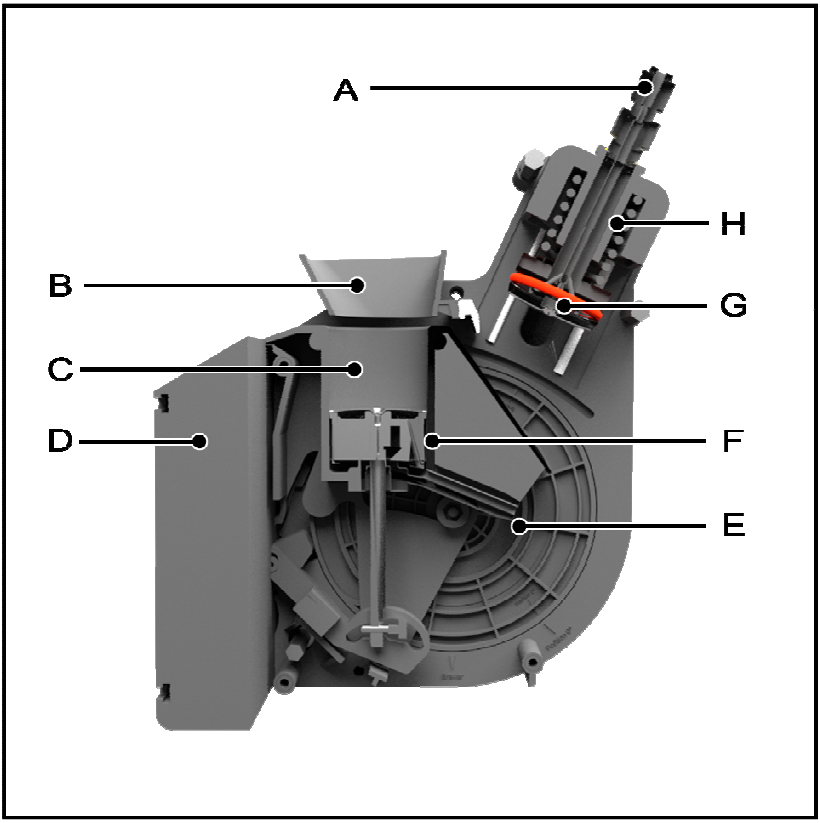

The espresso brewer consists of a 24v dc motor drive unit [D] fitted to the module with two control micro switches enabling the brewer unit to be removed and cleaned in water. The lower drive piston [F] and the upper coffee tamper [G] are controlled from the DC motor via a cam gear wheel to control the brewing positions accurately.

A	-	Hot water supply via a 4mm quick release pipe
B	-	Brewer filler opening, excess coffee scraper and waste puck scraper
C (37mm)	-	Brewer chamber 37mm capacity min 6.5gr to a max of 8gr Single espresso
C (44mm)	-	Brewer chamber 44mm capacity min 13gr to a max of 14g Double espresso
D	-	Brewer 24V dc motor drive unit with home / brew switches
E	-	Espresso outlet pipe
F	-	Lower piston / waste eject with a 315Micron filter
G	-	Upper piston (Tamper) with a 315Micron filter
H	-	Tampering pressure spring

7.6 Espresso Brewer Sequence of Operation

The espresso brewer moves to the home position where:

The spring tamper is at the top of the upper piston.
The waste eject is at the bottom of the lower piston.
The opening for the coffee is open and visible as shown right.

This position is detected by the two micro switches in the motor drive unit.

Left switch (CGEE) open
Right switch (CGE0) open

The brewer will move to its home positon every time power is applied to the machine even if the brewer has not been commissioned see section 8 on page 32.

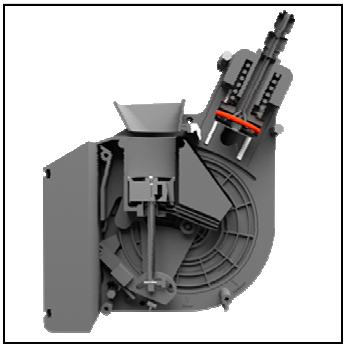

Depending on the brewer chamber size a single or double dose of coffee is dispensed into the chamber.

Do not overfill the chamber with excess coffee as this will damage the brewer motor. A white plastic scraper will remove excess coffee into the waste bin as a precaution on over fill.

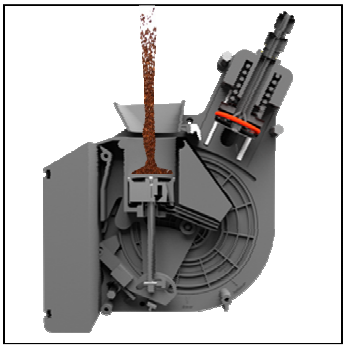

When the single or double dose of coffee is in the lower coffee chamber, the brewer will move to the brew position this will close the brewer filler opening preventing further coffee entering the chamber.

Left switch (CGEE) open
Right switch (CGE0) closed

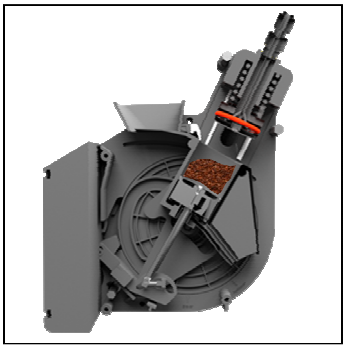

In the brew position the upper tamper piston will lower and compact the coffee into a tight puck with approximately 30 Lbs of force regulated by the coiled spring. The lower piston will rise against the spring.

A very small amount of water is dispensed to wet the coffee to start the pre infusion process. After the pre infusion the main pump turns on delivering hot water at 10 Bar through the compacted coffee to the dispense nozzle

Left switch (CGEE) closed
Right switch (CGE0) closed

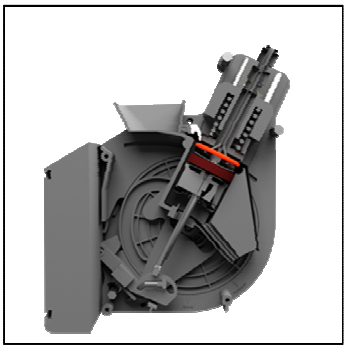

After the measured amount of water has been delivered through the compacted coffee the extraction process stops dispensing. The upper tamper piston retracts up to the top while the lower piston rises up to eject the used ground coffee.

Left switch (CGEE) open
Right switch (CGE0) closed

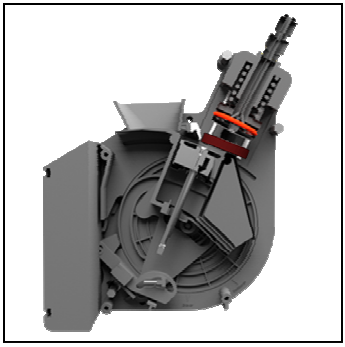

As the brewer starts to move to the home position the lower piston now in its raised state moves under a white rubber scraper and will push any used coffee pucks down the waste guide into the bin.

At the home position the lower piston lowers in readiness to accept the next ground coffee dose.

Left switch (CGEE) open
Right switch (CGE0) closed

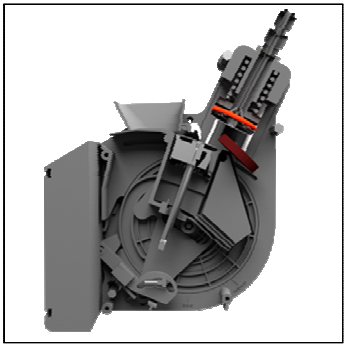

7.7 Removing the espresso brewer for cleaning or replacement

Switch off the electrical power supply to the machine.

Remove the espresso pipe from the top of the brewer. The pipe connection is a quick release pressure fitting. To remove the white PTFE pipe, press the inner collet around the pipe inwards towards the brewer using a special tool or by hand. With the collet pressed firmly in, pull the white pipe out of the connector sleeve.

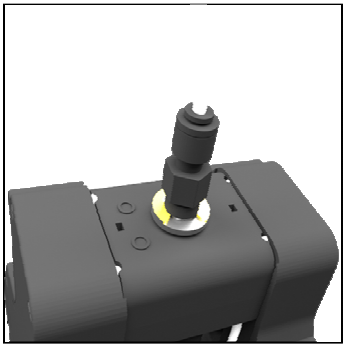

Remove the coffee dispense chute [A] by pulling outwards gently on both sides of the metal chute until it drops off. The dispense chute is connected to the doser by 4 plastic tabs.

Remove the brewer coffee waste puck bin guide [C] by lifting and pulling away from the brewer.

Remove the coffee outlet pipe D from the brewer.

Remove the brewer retaining bolt [B] by unscrewing and pulling out. This can be fitted to the left or right hand side of the brewer depending on the machine type.

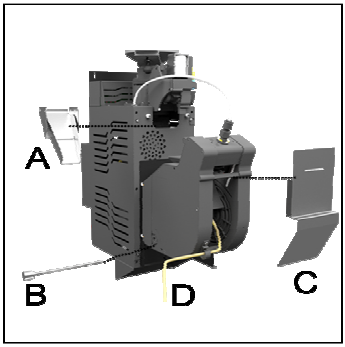

With all the parts removed from the brewer, the bottom of the brewer can now be pulled slightly forward to release from the retaining clip, and then lift the espresso brewer up and off the motor drive unit.

With the brewer unit removed this part can be cleaned thoroughly, there are no electrical parts within the brewer and it is safe to immerse in warm water to clean and sanitize.
Make sure that the brewer unit is clean and dry before refitting onto the brewer drive unit.

After refitting the brewer refit the other components back onto the brewer in the reverse way to removal.
Brewer retaining bolt.
High pressure espresso pipe.
Coffee dispense chute.
Coffee waste puck bin guide.

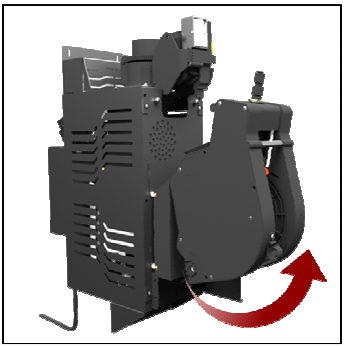

7.8 Espresso Brewer Maintenance

7.8.1 Annual Service

Espresso brewer module:

After a period of 25,000 cycles or one year whichever is sooner it is recommended that the filters and O ring seals will require changing.

After 50,000 cycles or two years whichever is sooner a complete inspection of the brewer and motor control unit is recommended any worn or damaged parts are to be replaced.

37mm - (9oz) -Brewer Service Kit - 2099508
44mm - (12oz) -Brewer Service Kit - 2099509

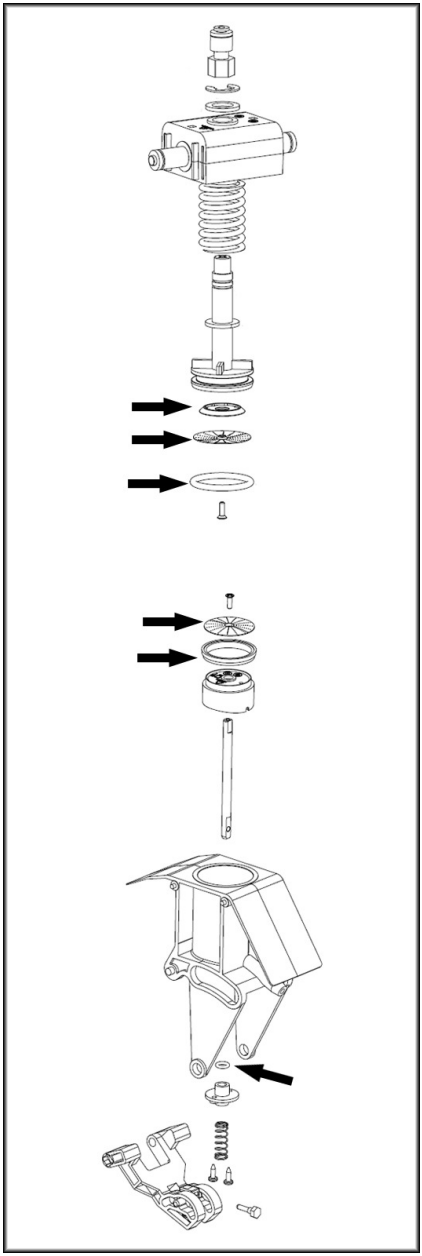

7.8.2 Brewer Cleaning

For daily and weekly cleaning follow the procedures outlined in section 5.1 on Page 11

8. Installation & commissioning

The installation of a new machine is a critical time in the relationship that you as a technician and your Company have with the client. First impressions count and last for many years. We recommend that you do as much site and machine preparation as possible before installing the machine. Refer to the sigma machine range handbook in order to get your new machine up and running. This manual only covers the Espresso brewer setup and running procedures.

It is essential that you have been fully trained on all the aspects relating the Espresso brewer prior to commencing any work on the machine.

What to expect when turning on your Sigma machine for the first time

NOTHING…

That's correct, Every Espresso Brewer that leaves Westomatic has been fully tested and calibrated to ensure that when it arrives with you everything has been set up leaving only minor adjustments to the grinder and doser settings. As part of the transportation and storage of the Espresso brewer it is important that the espresso brewer is drained of all water in the system including the air break water storage tank, the boiler and water pump. This prevents the system being stored in a pressurised condition and eliminating the possibility of the water freezing during transportation or storage. This process is called **De-Commissioning** (See section 8.10 on Page 39) the brewer and this will be the initial state of the brewer on arrival.

8.1 First time switch on

Before switching on the machine ensure that the procedures for the commissioning of the Sigma vending machine have been carried out prior to setting up the Espresso Brewer. Refer to the hand book for the Sigma machine on setting up and commissioning the vending machine.

The first time the machine is switched on the brewer will move to the home position to check the operation of the brewer switches, and then come to rest,

The brewer will not:-

1: Fill the boiler with water
2: Enable any Bean to cup drinks
3: Heat the boiler
4: Allow flushing of the brewer

Sigma Touch will show greyed out drinks menu for whole bean coffee drinks.
Sigma Light will not enable the drink code to be used for whole bean coffee drinks.
Sigma Simplicity will not light the drink options for whole bean coffee drinks.

8.2 Commissioning the Brewer

Commissioning the high Pressure Espresso Brewer requires you to open the door of the machine and enter [SERVICE MODE] and enter the service PIN code for the relevant machine type. Navigate to [MACHINE SETTINGS] then [BREWER 2 SETTINGS].

You will see one of the screens as shown on the right.
The BREWER TYPE should be set to HIGH PRESSURE.
Touch [COMMISSION BREWER] Sigma Touch or ok(Tick) [COMMISSION HPB] Sigma Light/Simplicity to begin the commissioning sequence.

Sigma Light / Simplicity LCD

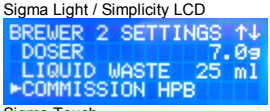

Sigma Touch

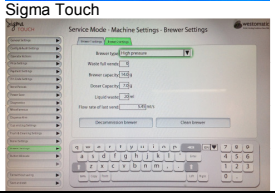

Both machines will ask you to confirm that you are ready and to have a bucket placed under the dispense nozzle which should hold at least 1 litre of water. Press OK or tick when happy to continue.

Sigma Light / Simplicity LCD

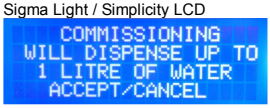

The brewer will now move to the vend position and will fill the air break and pump water through the pump, boiler and brewer into the waste bucket under the moving dispense head.

It may take a 10-15 seconds to see water at the dispense head as it takes 500ml of water fill the boiler.

When the brewer has pumped enough water through the system the brewer will stop pumping water and move to its home position, where the boiler will heat up.

8.3 Setting the boiler temperature

The Espresso brewer has its own independently controlled boiler. Enter [SERVICE MODE] and enter the service PIN code for the relevant machine type. Navigate to [MACHINE SETTINGS] and find [HPB BOILER]Sigma Light/Simplicity or [BOILER SETTINGS]Sigma Touch You will find the setting for the Boiler:

Boiler operating temperature – This is the temperature the boiler is set to run at

Boiler sleeping temperature – This is the temperature the boiler will lower to when not in use or idle.

Current boiler temperature – This is the current temperature of the boiler (on occasions this may be higher (+15°C) to the set temperature, this is a feature which allows extra temperature in the water to compensate for a cooler brewer).

Energy usage – Gives you some information regarding the amount of power used since power up.

Allow vend temperature – This is the allowable temperature range when a drink can be vended. You may increase this value on high volume sites.

Sigma Light / Simplicity LCD

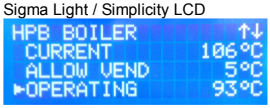

Sigma Touch

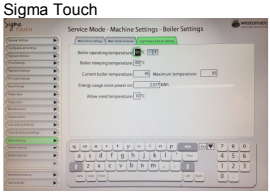

8.4 Setting the brewer type

You have a choice of two espresso brewer types, each has its own independent settings.

Sigma Light / Simplicity LCD

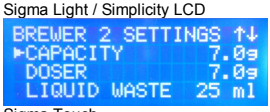

Sigma Touch

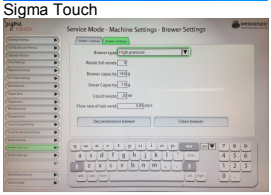

Brewer type 37mm – Single espresso 9oz drink
Brewer type 44mm – Double espresso 12oz drink

Enter [SERVICE MODE] and enter the service PIN code for the relevant machine type. Navigate to [MACHINE SETTINGS] and find [BREWER 2 SETTING]$_{\text{Sigma Light/Simplicity}}$ or [BREWER SETTINGS]$_{\text{Sigma Touch}}$ You will find the setting for the Brewer 2.

Waste full vends – This counts the number of vends required to fill a waste bin and disables drinks once this total has been reached. Setting the value to 0 disables this function and is the machine default setting.
Brewer Capacity – This tells the machine the amounts of coffee allowable in the brewer chamber. Settings for this are either 7.0 for a 37mm brewer or 14.0 for a 44mm brewer **and must not be altered in the machine settings**.
Doser capacity – This sets the amount of coffee in the doser each time **and must not be altered in the machine settings**.
Liquid Waste - There is no need to alter this value, it is part of the pre-infusion and coffee absorption calculation.
Commission Brewer – This will allow you to fill / empty the brewer of water for transportation or storage.
Clean Brewer – This function is used to perform a deep clean of the brewer with a cleaning tablet. This function is also available in the operator function in door open mode.

8.5 Setting the Doser and Grinder

Your machine will arrive configured for 9 or 12oz drinks with the correct brewer and configuration settings. Should you wish to change the brewer settings then refer to section 8.4 on setting the brewer type and capacity.

8.6 Brewer type and Capacity settings

Cup size	Drink size	Espresso Shots	Brewer Chamber	Doser Capacity	Brewer Capacity
9oz	180ml	Single	37mm	7.0 grams	7.0 grams
12oz	250ml	Double	44mm	7.0 grams	14.0 grams

Enter [SERVICE MODE] and enter the service PIN code for the relevant machine type. Navigate to [MACHINE SETTINGS] and find [DRINKS]$_{\text{Sigma Light/Simplicity}}$ or [CHANGE DRINK SETTINGS]$_{\text{Sigma Touch}}$ You will find the setting for the fresh ground bean coffee drinks.

Sigma Light / Simplicity LCD

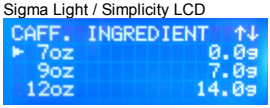

Sigma Touch

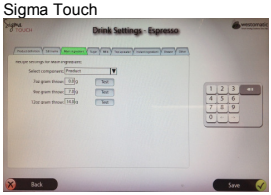

Enter the espresso drinks as this is the base to which all other drinks will be made from using the same settings.

The numbers entered here are **not** in grams but as a measure of doses to be used. A 9oz drink has ingredient of 7.0g, doser capacity of 7.0g, and a brewer capacity of 7.0g i.e. 1 drink will fill the doser 1 time with 1 doser full in the brewer.
Any ingredient throw <7g will deliver 1 doser full.
The same applies to 12oz drinks with ingredient of 14.0g, doser capacity of 7.0g and a brewer capacity of 14.0g. i.e. 1 drink will fill the doser 2 times with 2 doser fills into the brewer.
Any ingredient throw <14g and >7g will deliver 2 dosers full.

Upon receipt of your Sigma machine it is important to calibrate the machine to suit the coffee blend you intend to use.

This is a two part process and must be carried out in the following order. We recommend using a Dark Roast coffee bean and not a light or medium roast for the optimum extraction.

First - Set up the Coffee grinder
Second - Set up the doser

8.7 Setting the Grinder

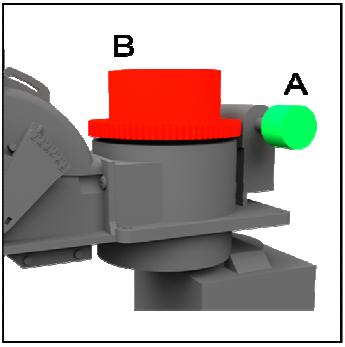

The default setting of the grinder is a good place to start.

The Grinder blades and burrs are located in the top part of the grinder [B] this can be raised (rotated in a left direction) to create a course grind by rotating the hand wheel [A] anti-clockwise or lowered (rotated in a right direction) to create a fine grind by rotating the hand wheel [A] clockwise.

After making any adjustments on the grinder it may take up to 3 vends before the settings have effect on gram throws due to some storage of coffee within the grinder body.

Follow these procedures when setting up the bean to cup brewer.

Enter [SERVICE MODE] and enter the service PIN code for the relevant machine type. Navigate to [MACHINE SETTINGS] and find [DRINKS]$_{\text{Sigma Light/Simplicity}}$ or [CHANGE DRINK SETTINGS]$_{\text{Sigma Touch}}$. You will find the setting for the Fresh Ground coffee drinks.

Enter the espresso drink as this is the base to which all other drinks will be made using the same settings.

Place a small cup under the doser unit to capture the ground coffee.

With the Sigma Light / Simplicity machine select the correct cup size and press the # (Simplicity) or Button 10 (0) (Light) to take a dry throw.

With the Sigma Touch machine select the correct cup size and press the TEST button next to the cup size the machine is set for.

The machine will bleep 3 times to warn that the machine will operate with the door open. Note that the grinder will fill and empty the doser either 1 or 2 times depending on the cup size.

Sigma Light / Simplicity LCD

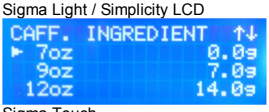

Sigma Touch

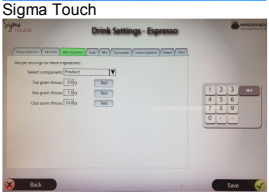

Repeat the dry throw test as many times as required until you are happy with the texture of the grind to suit your taste requirements.

If the grind is too coarse (it will feel like loose tea leaves)
If the grind is too coarse the water rushes through the coffee too quickly.
This results in a weak espresso with very little crema and sludgy coffee grout waste (under extracted). Ultimately this will cause the brewer chamber to block. This may also cause a blockage in the extraction.

What to do!
Adjust the grinder blades so that the blades are closer together resulting in a finer grind. See section 8.7

Warning!
Each time you adjust the grinder blades remember to vend **three dry throws** which will clear the previous grinds, and then run a dry test throw on the fourth to feel the grind.

If the grind is too fine (it will feel like talcum powder)
If the grind is too fine the water passes through the coffee too slowly if at all. This will result in a dark bitter taste which will be over extracted and cause the brewer chamber to flood or eventually explode as the pressure relief valve will activate.

What to do!
Adjust the grinder blades so that the blades are further apart resulting in a coarser grind. See section 8.7

8.8 Setting the Doser

The doser unit is used for dosing the ground coffee with an adjustment facility (B) for exact dose measures. Coffee dosage adjustment is achieved mechanically by means of a micro switch (A) activating a solenoid. The doser unit is mechanically fixed close to the grinder to minimise the amount of unused coffee grinds, ensuring every coffee is freshly ground on demand. An override button (C) is used to manually operate the doser by pressing upwards.

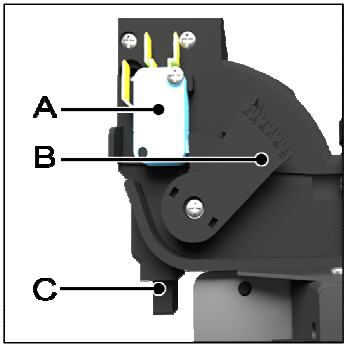

A	:	Doser full switch
B	:	Doser capacity setting
C	:	Manual release button

8.8.1 Doser Capacity

The Doser capacity can be set by the doser lever position (A). Each of the 11 positions refers to an approximate dose of 0.5gr ± 0.1gr

Doser capacity from 5.5gr to 10.5gr with a medium degree ref. CEI EN 60661

The doser lever position (A) can be moved to the desired indexed position to attain the correct gram throw by pushing in towards the doser body and moving the lever arm (A) into the next indexed position shown on (B) following the dose lever position typical gram throw chart.

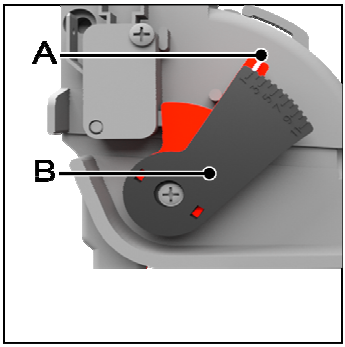

Doser Lever Position	1	2	3	4	5	6	7	8	9	10	11
Gram Throw	5.5	6.0	6.5	7.0	7.5	8.0	8.5	9.0	9.5	10.0	10.5

By default the doser is set to setting 5 = 7.5 grams of coffee.

After setting up the coffee grinder for your required grind it is now time to set up the doser unit. The doser delivers the set amount of coffee into the brewer every time, it is important to set this up after the correct grind has been made.

As per section 8.7 on page 35 you have to take dry test throws of the ingredient only this time you are measuring the gram throw in grams.

With a suitable coffee collection cup and a set of scales collect the coffee exiting the doser unit, you may depending on the coffee collection device have to remove the coffee dispense chute (section 5.1.6 on page 13). Weigh the collected coffee until you have either 7 or 14 grams depending on the brewer type. If necessary adjust the doser lever arm (8.8.1 page 36) to increase or decrease the doser capacity.

Now you have the grinder and doser set up it is time to take a test vend to check the quality of the espresso from the brewer.

From DOOR OPEN mode, enter [DRINK TESTING] on all Sigma machine types and navigate to Fresh Ground Espresso.

Take a test vend and watch the process and check the following:

- The grinder delivered one or two dosed measures of coffee into the brewer.
- When the brewer moved to the brewer position there was not an excessive amount of wasted coffee dislodged by the coffee scraper.
- The brewer did not struggle to tamp the coffee
- The extraction of the espresso with the perfect crema on top.

If your espresso did not have a nice rich layer of crema on the top, refer to the brewer adjustment tips on the next page as you may have to adjust the grinder or doser settings.

8.9 Brewer Adjustment tips

Crema layer low	Crema Layer perfect	Crema layer missing
- Grind too fine - Bitter taste - Extraction time too long - Too much coffee dose - Coffee drips from nozzle - Brewer pressure valve opens The coffee is ground too fine, or the dosed coffee is too much. The extraction is too extreme due to a too long contact time with the coffee. (to many bitter substances).  Extraction over >30s For a 25ml Shot of espresso **Advice:** Set the coffee grinder coarser (See section 8.7) or reduce the doser capacity (See section 8.8) **Note!** When setting the grinder coarser there is a risk of excess measurement (coffee volume / weight increases) as a result the espresso brewer can jam.	- The perfect grind - Perfect coffee taste - The right extraction time - The right coffee dose - Steady flow of coffee The coffee is ground well, the taste extraction is optimal. The crema layer is firm and persists for a long time.  Extraction between 25 -30s For a 25ml Shot of espresso **Advice:** Enjoy your coffee Save the machine settings and copy drink settings to all other BTC coffee drinks. Upload and save the machine config file.	- Grind too coarse - Weak tasting no body - Extraction time short - To low coffee dosing - Coffee pours out fast The ground coffee is too coarse or there is not enough dosed coffee. The extraction time is fast. The coffee will be under extracted resulting in little or no crema layer.  Extraction less than <25s For a 25ml Shot of espresso **Advice:** set the coffee grinder finer (See section 8.7). Adjust the grind setting only in steps of a maximum 1/4 turn each time. Only the 3rd cup of coffee is 100% made with the changed grind fineness! **Note!** When setting the grinder finer there is a risk of excess measurement (coffee volume / weight increases) as a result the espresso brewer can jam.

8.10 Decommission the Brewer

After the machine has been in service for some time it is essential that prior to the machine being moved, shipped or placed in storage that all the water in the high pressure brewer is removed to prevent storage under pressure or freezing of water in the pump.

Before de-commissioning the brewer you will need to remove the coffee waste bin from the machine. Under the brewer module you will find the drain valve [A].

Connect a hose [B] onto the valve or place a bucket under the valve to collect waste water.

Do not open the valve

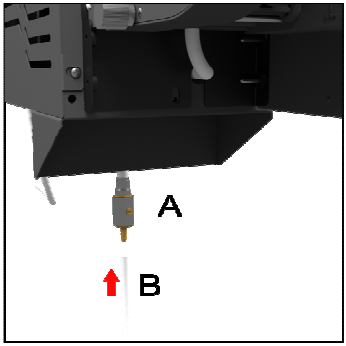

De-commissioning the high Pressure Espresso Brewer requires you to open the door of the machine and enter [SERVICE MODE] and enter the service PIN code for the relevant machine type. Navigate to [MACHINE SETTINGS] then [BREWER 2 SETTINGS].

You will see one of the screens as shown on the right.
Touch [DECOMMISSION BREWER] Sigma Touch or ok(Tick) [DE-COMMISSION HPB] Sigma Light/Simplicity to begin the de-commissioning process.

Sigma Light / Simplicity LCD

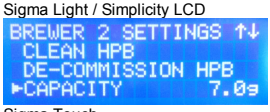

Sigma Touch

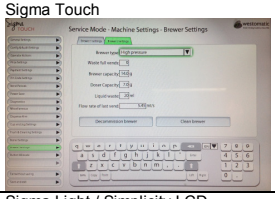

Both machines will ask you to confirm that you are ready and to have a bucket placed under the dispense nozzle which should hold at least 1 litre of water. Press OK or tick when happy to continue.

Sigma Light / Simplicity LCD

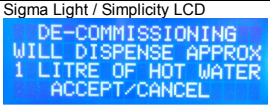

The machine will home the brewer and start to pump out the hot water from the boiler while still filling with cold water. As the temperature in the boiler drops the air break will stop filling and begin to drain. When the air break is empty of water the screen will prompt you to open the drain valve if you want to drain the boiler. At this point make sure that the drain valve is over a bucket, or you connect a pipe from the valve to the liquid waste bin.

Open the drain valve with a screwdriver and select **YES** to drain the boiler.

The boiler output valve will open to allow air into the system draining the boiler. The on screen prompt will instruct you when it is safe to close the drain valve.

9. Control Board

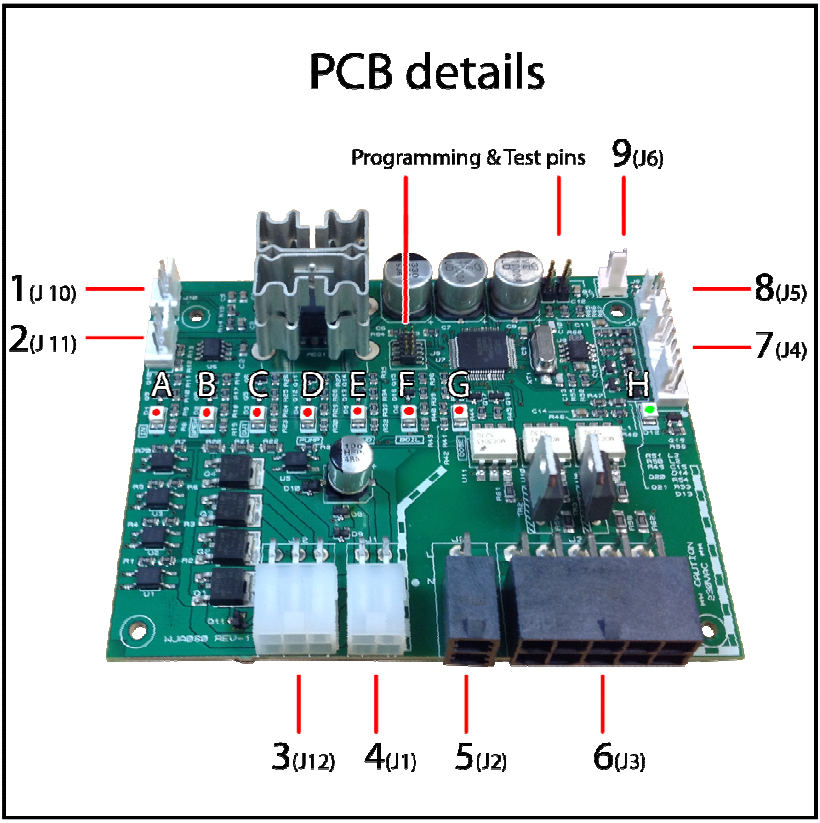

9.1 PCB Connections

Connector	Description	Led	Description
1	J10 - Volumetric counter input	A	Water inlet valve open
2	J11 - CAN bus communication	B	Brewer motor running
3	J12 – DC output control	C	Hot water outlet open
4	J01 – DC Supply	D	Water pump running
5	J02 – AC Supply	E	Bean grinder running
6	J03 – AC output control	F	Boiler heater element on
7	J04 – Digital IO Switches/Motor	G	Doser solenoid activated
8	J05 – Temperature Probe	H	Power / Fault indication
9	J06 – Emergency Decommission Button		

9.2 Espresso Brewer Wiring

For (DESTINATION) and (CONNECTOR) information and location refer to espresso brewer wiring diagram section 9.3

9.2.1 Connector 1 - J10 Volumetric counter input

This reads the number of counts from the volumetric counter (FLOW) to determine the correct amount of water used with the expresso extraction process.

Connector	Function	Wire Colour	Type	Destination
J10-1	0v	Black	0.5mm^2	FLOW-2
J10-2	Pulse Counter Input	White	0.5mm^2	FLOW-1
J10-3	5v	Red	0.5mm^2	FLOW-3

9.2.2 Connector 2 - J11 - CAN bus communication

This provides communications with the Sigma machines VMC controller.

Connector	Function	Wire Colour	Type	Destination
J11-1	Can 0v	White	7/0.2mm	HP BREWER-1
J11-2	Can Lo	White	7/0.2mm	HP BREWER-2
J11-3	Can Hi	Black	7/0.2mm	HP BREWER-3
J11-4	Can 12v	Red	7/0.2mm	HP BREWER-4

9.2.3 Connector 3 - J12 – DC output control

DC Output controls to motor and solenoid valves

Connector	Function	Wire Colour	Type	Destination
J12 -1	0v	Black	0.5mm^2	Boiler outlet , BREWER-2
J12 -2	0v	Black	0.5mm^2	Doser Solenoid, Water inlet
J12 -3	Doser Solenoid	Yellow	0.5mm^2	Doser solenoid
J12 -4	Water Inlet Valve	Green	0.5mm^2	Water inlet valve
J12 -5	Brewer Motor	Red	0.5mm^2	BREWER-1
J12 -6	Boiler Output Valve	White	0.5mm^2	Boiler valve

9.2.4 Connector 4 - J01 – DC Supply

DC power connection for Brewer unit and extract fan

Connector	Function	Wire Colour	Type	Destination
J1-1	24v Supply	Red PTFE	19/0.2mm	HP BREWER-5
J1-2	0v Supply	Black PTFE	19/0.2mm	HP BREWER-6
J1-3	Fan 24v	Red	0.5mm^2	Fan +Ve
J1-4	Fan 0v	Black	0.5mm^2	Fan –Ve

9.2.5 Connector 5 - J02 – AC Supply

AC power connection

Connector	Function	Wire Colour	Type	Destination
J2-2	Live	Brown	1.0mm	L
J2-1	Neutral	Blue	1.0mm	N
Earth stud	Earth	Green / Yellow	1.0mm	E

9.2.6 Connector 6 - J03 – AC output control

AC power connection for grinder, boiler and pump.

Grinder AC supply		**Mains Bean Grinder**		
Connector	**Function**	**Wire Colour**	**Type**	**Destination**
J3-9	Grinder Live	Brown J3-9	1.0mm	Grinder Live
J3-5	Grinder Neutral	Blue J3-5	1.0mm	Grinder Neutral
E2	Earth	Green / Yellow	1.0mm	Grinder Earth

Boiler AC supply		**Mains Boiler 1.5Kw element**		
Connector	**Function**	**Wire Colour**	**Type**	**Destination**
J3-6	Boiler Live	Brown J3-6	1.0mm	Boiler Live
J3-2	Boiler Neutral	Blue J3-2	1.0mm	Boiler Neutral
E8	Earth	Green / Yellow	1.0mm	Boiler Earth

Pump AC supply		**Mains fluid o tech mono pump**		
Connector	**Function**	**Wire Colour**	**Type**	**Destination**
J3-8	Pump Live	Brown J3-8	AWG 20	PUMP-3
J3-4	Pump Neutral	Blue J3-4	AWG 20	PUMP-2
E7	Earth	Green / Yellow	AWG 20	PUMP-4

9.2.7 Connector 7 - J04 – Digital IO Switches/Motor

Digital control circuits for switches and water level probes

Connector	Function	Wire Colour	Type	Destination
J4 – 1	Brewer Left Switch CGEE	Grey	$0.5mm^2$	BREWER – 6
J4 – 2	Brewer Right Switch GCE0	Blue	$0.5mm^2$	BREWER – 5
J4 – 3	Brewer Switch 0v	Black	$0.5mm^2$	BREWER – 4
J4 – 4	Air Break Common	Black	$0.5mm^2$	C + Terminal
J4 – 5	Air Break Empty	White	$0.5mm^2$	E + Terminal
J4 – 6	Air Break Full	Yellow	$0.5mm^2$	F + Terminal
J4 – 7	Doser switch 0v	White	$0.5mm^2$	DOSER -1
J4 - 8	Doser full switch	White	$0.5mm^2$	DOSER -2

9.2.8 Connector 8 - J05 – Temperature Probe

NTC boiler temperature probe

Connector	Function	Wire Colour	Type	Destination
J5-1	Temperature Probe	White	$0.5mm^2$	PROBE-1
J5-2	0v	White	$0.5mm^2$	PROBE-2

9.2.9 Connector 9 - J06 – Emergency Decommission Button

Emergency Decommission Button

Connector	Function	Wire Colour	Type	Destination
J6-1	Decommission Button	White	$0.5mm^2$	Button 1
J6-2	0v	White	$0.5mm^2$	Button 2

9.3 Espresso Brewer Wiring

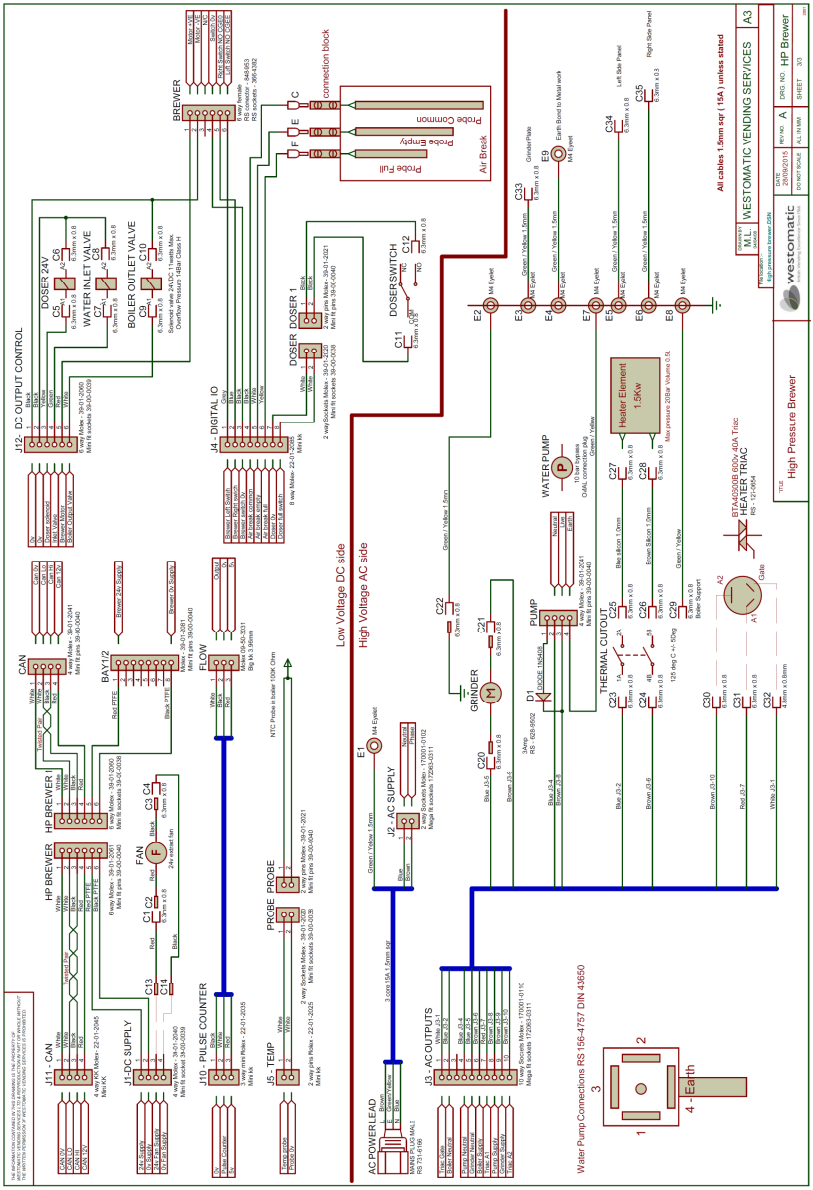

9.4 Espresso Brewer LED's

A: Water inlet valve open
B: Brewer motor running
C: Hot water outlet open
D: Water pump running
E: Bean grinder running
F: Boiler heater element on
G: Doser solenoid activated
H: Power / Fault indication

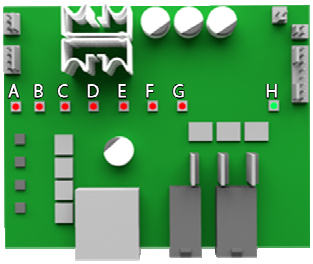

The espresso brewer has a row of LED's in the centre of the board to identify outputs in use. This can be used to fault find the brewer module. A red LED indicates the output is active and the component connected to that output is operational.

The green power LED [H] will have a **constant on condition** indicating:

- The board has a healthy 24V Supply
- The board is in communication with the VMC controller.
- The brewer has run a home cycle and stopped in the home position.

The green power LED [H] will have a **flashing on/off condition** indicating a fault shown in the chart below:

Fault	Green Led Flashes	EVA-DTS Code	Fault Number
Header tank probe wiring	1	EDP_2	46
Header tank/boiler fill timeout	2	EDK_2	43
No heating	3	EDL_2	44
Heat time-out	4	EDL_2	44
Doser time-out (out of beans)	5	EDJ_101 or EDJ102	65 or 66
Doser failure	6	EDU_1 or EDU_2	36 or 37
Brewer failure	7	EEJ_1 or EEJ_2	50 or 52
Pump failure / Slow flow	8	EE_101 or EE_102	34 or 35
Loss of 24V supply	9	ECA_241 or ECA_242	62 or 63
Board PCB over temperature	10	EEI_1 or EEI_2	67 or 68
Temperature sensor fail	11	EDM_2	45
No flow of water	12	EE_201 or EE_202	32 or 33
Flow leak	13	EFJ_2	38
Header leak	14	EFJ_2	38
Brewer chamber removed	-	EEF_1 or EEF_2	41 or 42

10. Useful part numbers

Mini Inline water filter	1058005
Anti drip nozzle	1058007
Flowmeter – Volumetric Counter	1058004
Air break with probe set	1058003
Pressure boiler with heater element with temperature probe	1058002
230Vac grinder	1055001
Espresso Brewer outlet hose 3_{mm}ID x 5_{mm}OD x 400_{mm}	1029072
DC Extraction fan 24v	1020004
Fuse T5.0Amp 32x6.3 HBC DC Brewer supply Bay 2	1025007
Fuse T10.0Amp 32x6.3 HBC AC grinder supply Bay 2	1025010
Loom AC side High pressure brewer	1035062
Loom DC side High pressure brewer	1035063
Ingredient chute Stainless Steel	1037321
Waste Guide	1037324
Water pump set at 10Bar	1046006
Inlet water solenoid valve	1050004
Espresso brewer unit 9oz 180ml single shot espresso	1058008
Espresso brewer unit 12oz 240ml double shot espresso	1058001
Boiler heater triac 600V 40A 3 pin	1018042
Espresso brewer water inlet PTFE pipe 2_{mm}ID x 4_{mm}OD	1029076
Side cover x1	1037317
Doser cover plate	1037334
High pressure brewer PCB control board	1042030
Mini dispense tube Stainless Steel espresso vend output	1029038
Replacement grinder blade burrs	151069
Cleaning tablets x200	9199607
Lavette super cleaning cloth x25	9199608
Doser unit 24v with switch	1058006
Whole bean canister	1012010
37mm (9oz) Brewer Service Kit ^{V5}	2099508
44mm (12oz) Brewer Service Kit ^{V5}	2099509

Notes:

westomatic
British Vending Excellence Since 1966

How to download technical manuals from the Westomatic website:-

1. **Enter Westomatic into your search engine.**
2. **Enter the website.**
3. **Click on: AFTER SALES SUPPORT.**
4. **Enter your details.**
5. **You will now have complete access to our manuals.**

Tel: +44 (0) 1626 323100 Fax: +44 (0)1626 369400 vending@westomatic.com www.westomatic.com